SCHEMATIC DIAGRAM

MODEL : 50H81 Chassis No. TAC0151

WARNING: BEFORE SERVICING THIS CHASSIS, READ THE "X-RAY RADIATION PRECAUTION", "SAFETY PRECAUTION" AND "PRODUCT SAFETY NOTICE" ON THE MANUAL FOR THIS MODEL.

CAUTION: The international hazard symbols "⚠" in the schematic diagram and the parts list designate components which have special characteristics important for safety and should be replaced only with types identical to those in the original circuit or specified in the parts list. The mounting position of replacements is to be identical with originals. Before replacing any of these components, read carefully the PRODUCT SAFETY NOTICE on the MANUAL for this model. Do not degrade the safety of the receiver through improper servicing.

NOTE:

1. RESISTOR Resistance is shown in ohm [K = 1.000, M = 1.000.000]. All resistors are 1/6W and 5% tolerance carbon resistor, unless otherwise noted as the following marks.
   1/2R = Metal or Metal oxide of 1/2 watt 1/2S = Carbon compsistion of 1/2 watt
   1RF = Fuse resistor of 1 watt 10W = Cement of 10 watt
   K = ±10% G = ±2% F = ±1%
2. CAPACITOR Unless otherwise noted in schematic, all capacitor values less than 1 are expressed in μF, and the values more than 1 in pF.
   All capacitors are ceramic 50V, unless otherwise noted as the following marks.
   Electolytic capacitor Mylar capacitor
3. The parts indicated with " ⚠ " have special characteristics, and should be replaced with identical parts only.
4. Voltages read with DIGITAL MULTI-METER from point indicated to chassing ground, using a color bar signal with all controls at normal, line voltage 120 volts.
5. Waveforms are taken receiving color bar signal with enough sensitivity.
6. Voltage reading shown are nominal values and may vary ±20% except H.V.

AREA 4
(No use 50H71)

DIGTAL-CONVER
PD0078

ITEM	R7889	R7888
MODEL		
42H81/43H71/43HK71	27K	27K
50H71/50H81/50HK81 53H71/53HK71	18K	18K
57H81/57HK81/61H71 65H81/65HK81	12K	33K

(1/7)
SIGNAL/CONVER (Conver)
50H81serise

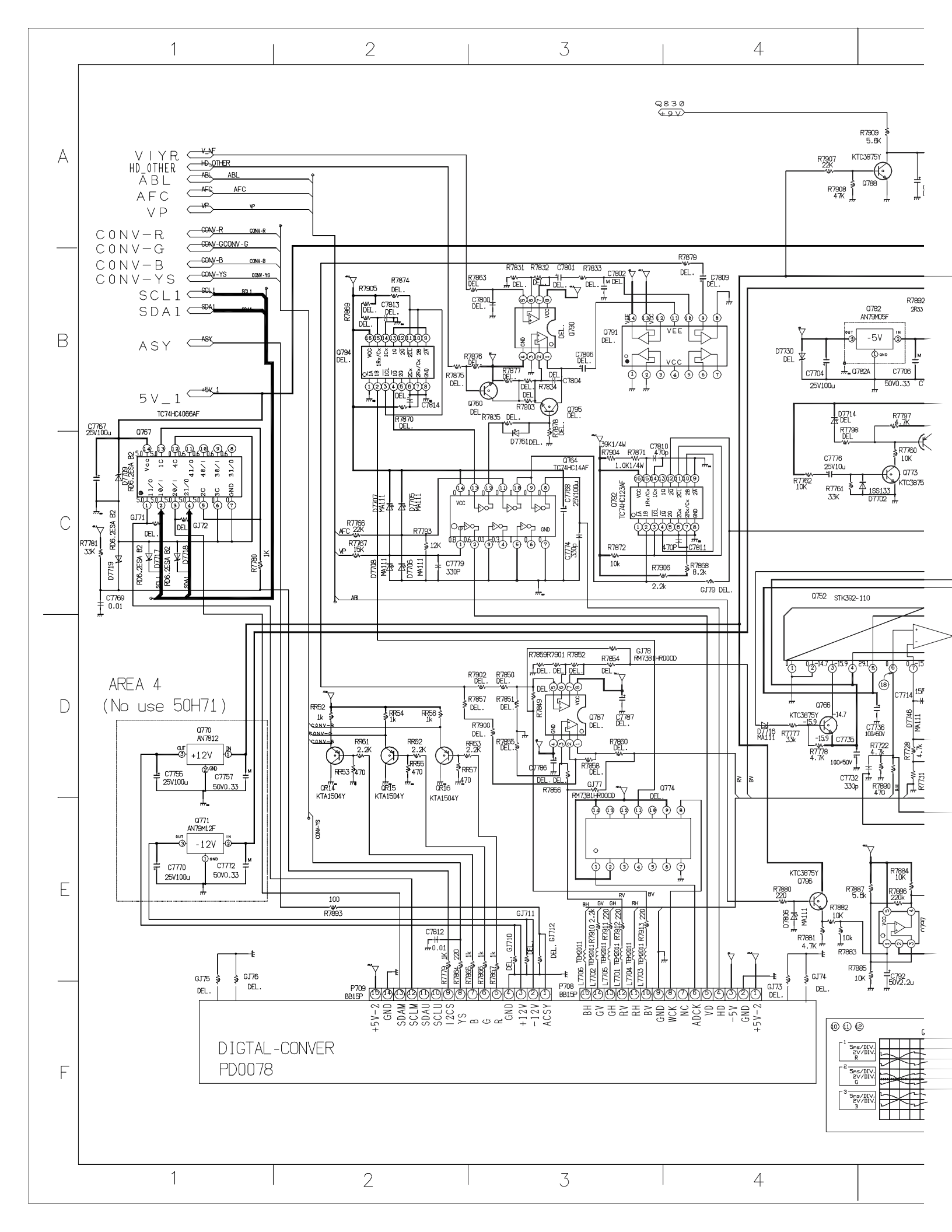
Q830
+9V
R7909 5.6K
R7907 22K
KTC3875Y
R7908 47K
Q788
V_IN
HD_OTHER
ABL
AFC
VP
CONV-R
CONV-G
CONV-B
CONV-YS
SCL1
SDA1
ASY
5V_1
TC74HC4066AF
Q767
C7767 25V100u
C7769 0.01
R7781 33K
R7780 1K
GJ71
GJ72
R7766 AFC 22K
R7767 VP 15K
R7793 12K
C7779 330P
C7774 330P
C7768 25V100u
Q764 TC74HC14AF
Q792 TC74HC123AF
R7904 39K1/4W
R7871 1.0K1/4W
C7810 470p
C7811 470P
R7872 10k
R7906 2.2k
R7868 8.2k
GJ79 DEL.
R7869
R7874
C7813
C7814
R7870
Q794
R7863
R7831
R7832
C7801
R7833
C7802
R7879
C7809
C7800
Q790
Q791
R7876
R7875
R7877
C7804
C7806
Q760
R7834
R7903
Q795
R7835
D7761
Q782 AN79M05F
-5V
Q782A
D7730
C7704 25V100u
C7706 50V0.33
D7714
R7797 4.7K
R7798
R7760 10K
C7776 25V10u
Q773 KTC3875
R7762 10K
R7761 33K
1SS133
D7702
AREA 4
(No use 50H71)
Q770 AN7812
+12V
C7755 25V100u
C7757 50V0.33
Q771 AN79M12F
-12V
C7770 25V100u
C7772 50V0.33
RR52 1k
RR54 1k
RR56 1k
RR61 2.2K
RR62 2.2K
RR63 2.2K
RR53 470
RR55 470
RR57 470
QR14 KTA1504Y
QR15 KTA1504Y
QR16 KTA1504Y
R7902
R7850
R7857
R7851
R7900
R7855
R7859
R7901
R7852
R7854
GJ78 RM73B1H-R000D
R7849
Q787
C7787
C7786
R7858
R7860
R7856
GJ77 RM73B1H-R000D
Q774
R7893 100
GJ711
C7812 0.01
R7778 1K
R7854 220
R7855 1k
R7856 1k
R7857 1k
GJ710
GJ712
GJ75
GJ76
P709 BB15P
P708 BB15P
GJ74
GJ73
+5V-2 GND SDAM SCLM SDAU SCLU I2CS YS B G R GND +12V -12V ACSY
BH GV GH RV RH BV GND WCK NC ADCK VD HD -5V GND +5V-2
TEN0011
DIGTAL-CONVER
PD0078
Q752 STK392-110
Q766 KTC3875Y
R7777 33k
R7778 4.7K
C7735
C7736 100/50V
C7732 330p
R7722 4.7k
R7728 4.7K
R7731
R7730 470
D7716 MA111
D7746 MA111
C7714
Q796 KTC3875Y
R7880 220
R7882 10K
R7881 4.7K
R7883 10k
R7884 10K
R7886 220k
R7887 5.6k
R7885 10K
C792 50V2.2u
Q797
D7706 MA111
5ms/DIV 2V/DIV R
5ms/DIV 2V/DIV G
5ms/DIV 2V/DIV B

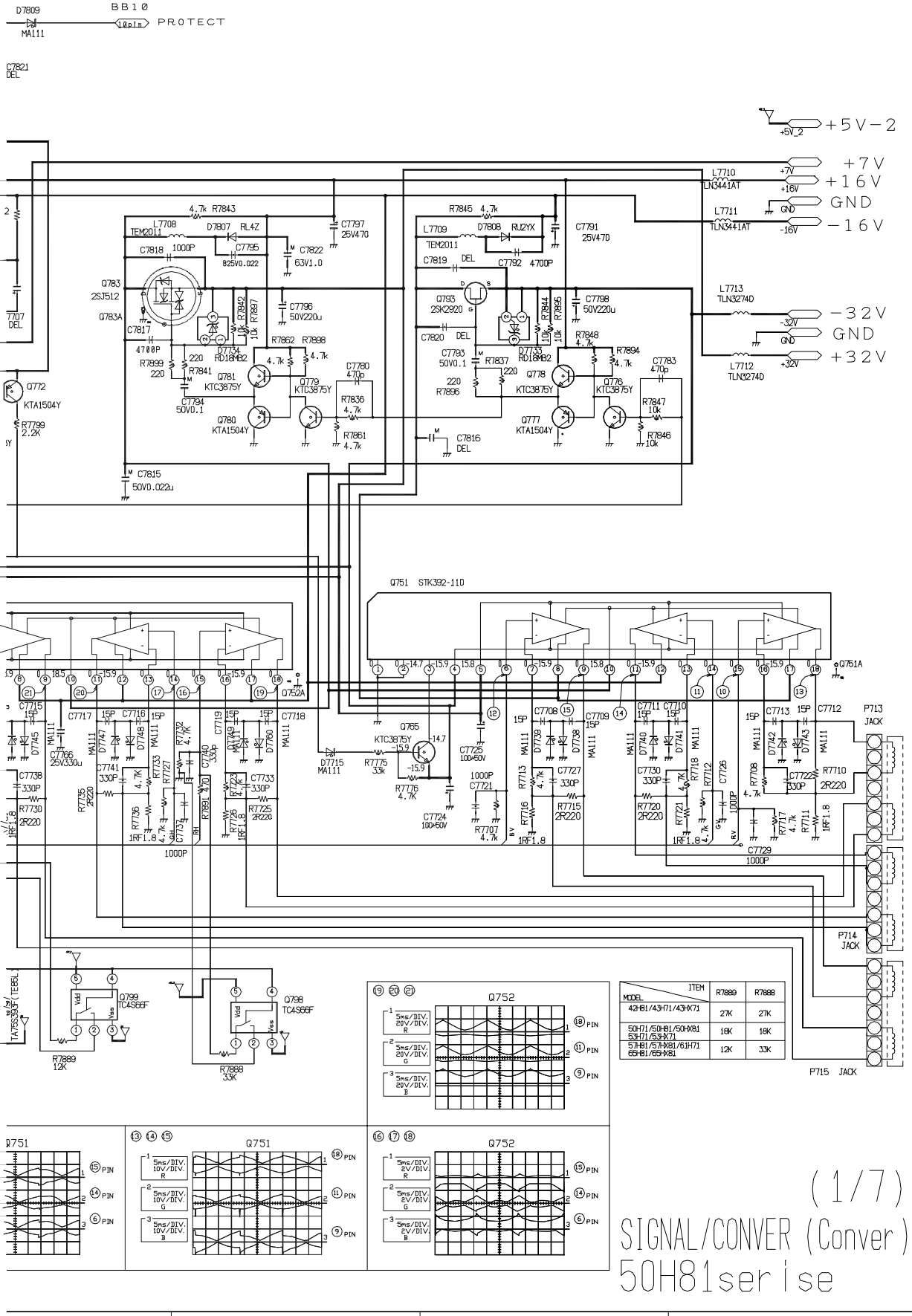

ITEM / MODEL	R7889	R7888
42H81/43H71/43HK71	27K	27K
50H71/50H81/50HK81 53H71/53HK71	18K	18K
57H81/57HK81/61H71 65H81/65HK81	12K	33K

(1/7)

SIGNAL/CONVER (Conver)

50H81serise

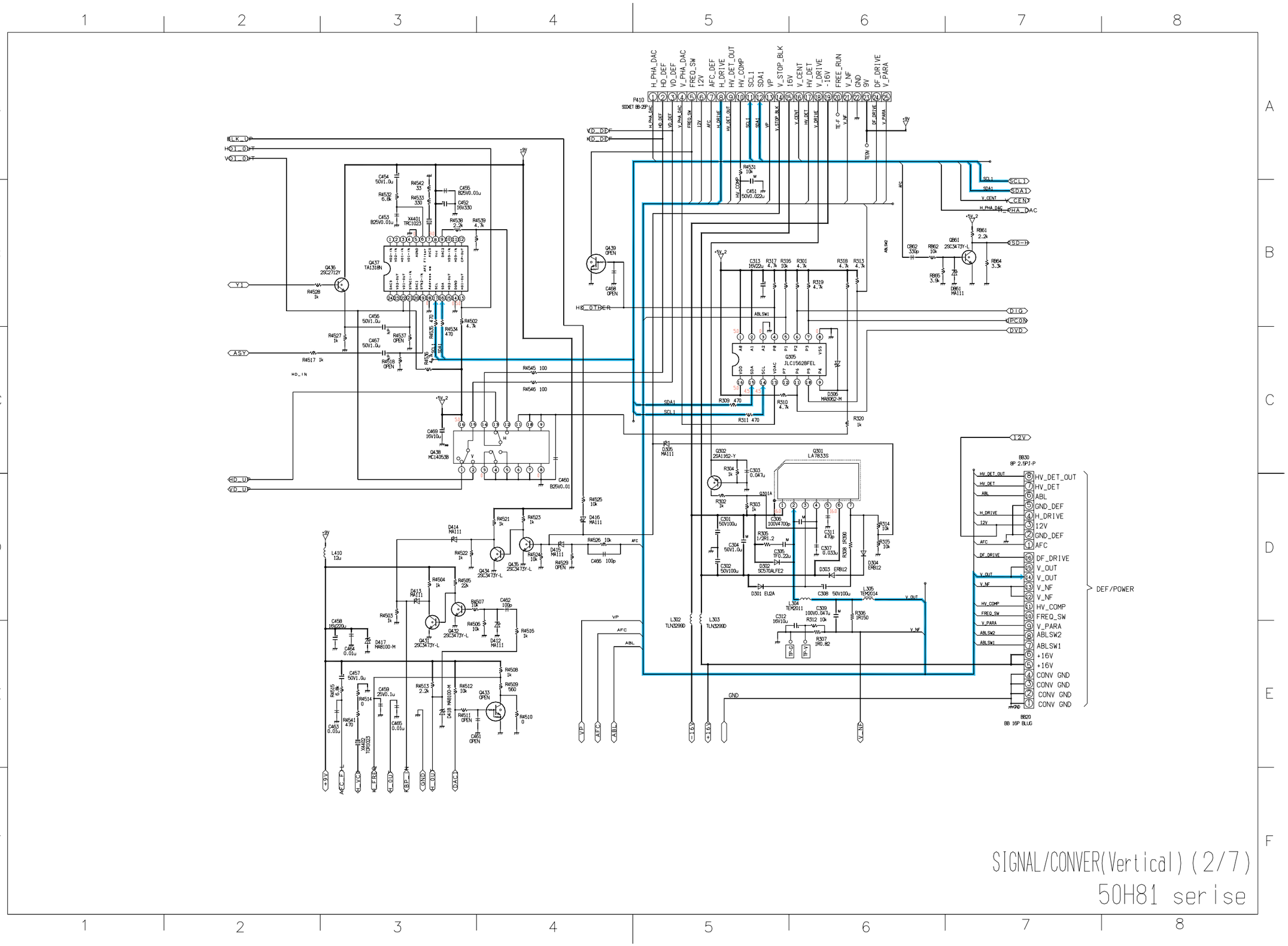
H_PHA_DAC
HD_DEF
VD_DEF
V_PHA_DAC
FREQ_SW
12V
AFC_DEF
H_DRIVE
HV_DET_OUT
HV_COMP
SCL1
SDA1
VP
V_STOP_BLK
16V
V_CENT
HV_DET
V_DRIVE
-16V
FREE_RUN
V_NF
GND
9V
DF_DRIVE
V_PARA
P410
SIDEKT BB-2SP
BLK_DET
HD_OUT
VD_OUT
Y1
ASY
HD_IN
HD_DET
VD_DET
HD_OUT
VD_OUT
HS_OTHER
DIG
HPCON
DVID
SCL1
SDA1
V_CENT
H_PHA_DAC
ABLSW2
ABLSW1
12V
VP
AFC
ABL
GND
V_NF
V_OUT
DEF/POWER
BB30
BP 2.5PJ-P
BB20
BB 16P BLUG
HV_DET_OUT
HV_DET
ABL
GND_DEF
H_DRIVE
12V
GND_DEF
AFC
DF_DRIVE
V_OUT
V_OUT
V_NF
V_NF
HV_COMP
FREQ_SW
V_PARA
ABLSW2
ABLSW1
+16V
+16V
CONV GND
CONV GND
CONV GND
CONV GND
SIGNAL/CONVER(Vertical)(2/7)
50H81 serise

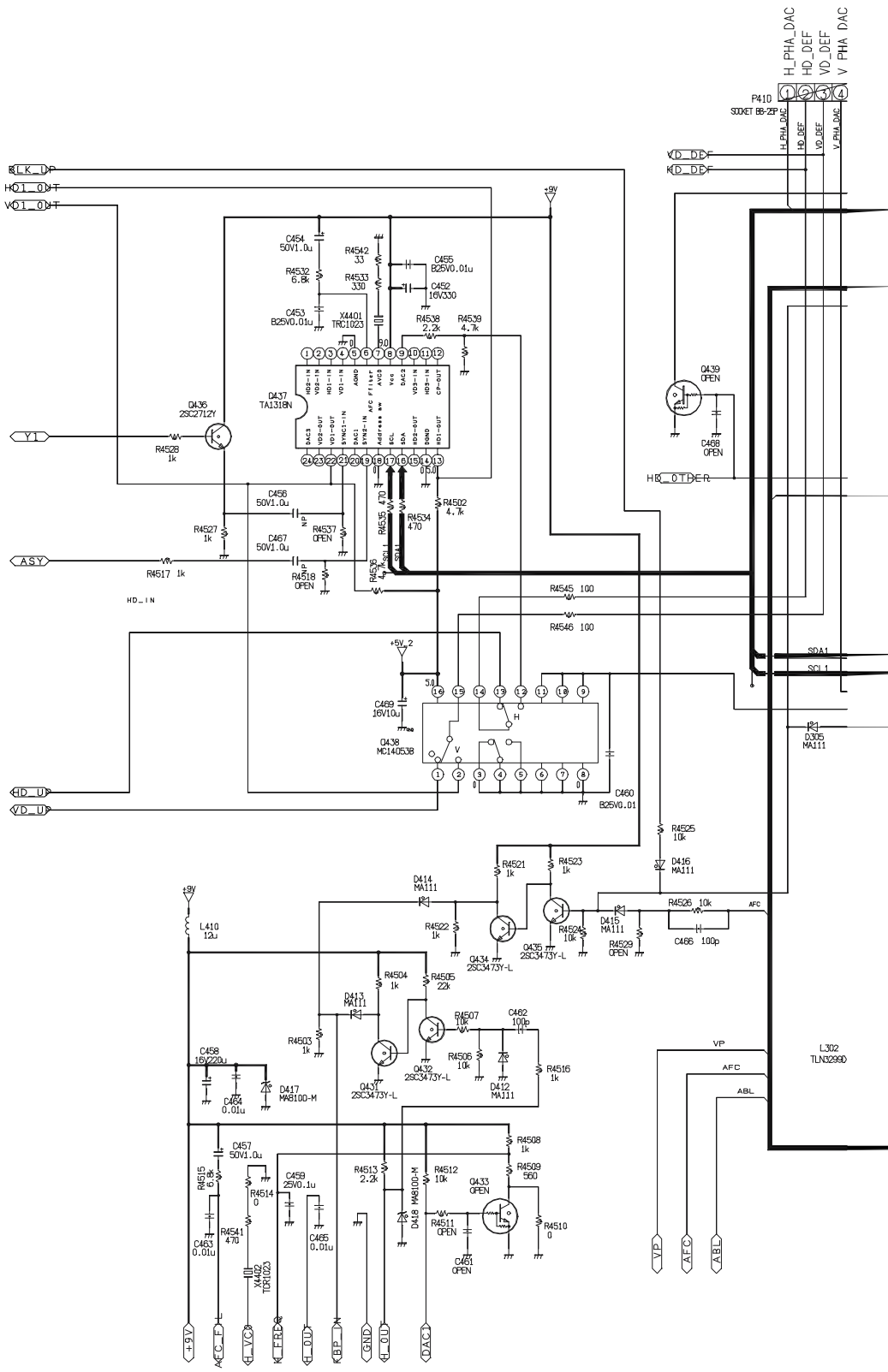
H_PHA_DAC
HD_DEF
VD_DEF
V PHA DAC
P410
SOCKET BB-2EPC
VD_DDF
HD_DDF
BLK_DP
HD1_ONT
VD1_ONT
+9V
C454 50V1.0u
R4542 33
R4532 6.8k
R4533 330
C455 B25V0.01u
C452 16V330
C453 B25V0.01u
X4401 TRC1023
R4538 2.2k
R4539 4.7k
Q437 TA1319BN
Q436 2SC2712Y
Y1
R4528 1k
Q439 OPEN
C468 OPEN
HD_OTHER
C456 50V1.0u
R4527 1k
R4537 OPEN
C467 50V1.0u
R4535 470
R4534 470
R4502 4.7k
ASY
R4517 1k
R4518 OPEN
HD_IN
R4545 100
R4546 100
SDA1
SCL1
+5V_2
C469 16V10u
Q438 MC14053B
D305 MA111
HD_UP
VD_UP
C460 B25V0.01
R4525 10k
D416 MA111
R4521 1k
R4523 1k
D414 MA111
R4522 1k
Q434 2SC3473Y-L
Q435 2SC3473Y-L
R4524 10k
D415 MA111
R4526 10k
AFC
C466 100p
R4529 OPEN
L410 12u
R4504 1k
R4505 22k
D413 MA111
R4507 10k
C462 100p
R4503 1k
Q432 2SC3473Y-L
R4506 10k
D412 MA111
R4516 1k
C458 16V220u
C464 0.01u
D417 MA8100-M
Q431 2SC3473Y-L
VP
AFC
ABL
L302 TLN3299D
R4508 1k
C457 50V1.0u
R4515 47k
R4514 0
C459 25V0.1u
R4513 2.2k
R4512 10k
R4509 560
C463 0.01u
R4541 470
C465 0.01u
D418 MA8100-M
Q433 OPEN
R4511 OPEN
R4510 0
C461 OPEN
X4402 TCR1023
+9V
AFC_F
H_VCO
H_FRP
H_OUT
KBP
GND
H_OUT
DAC

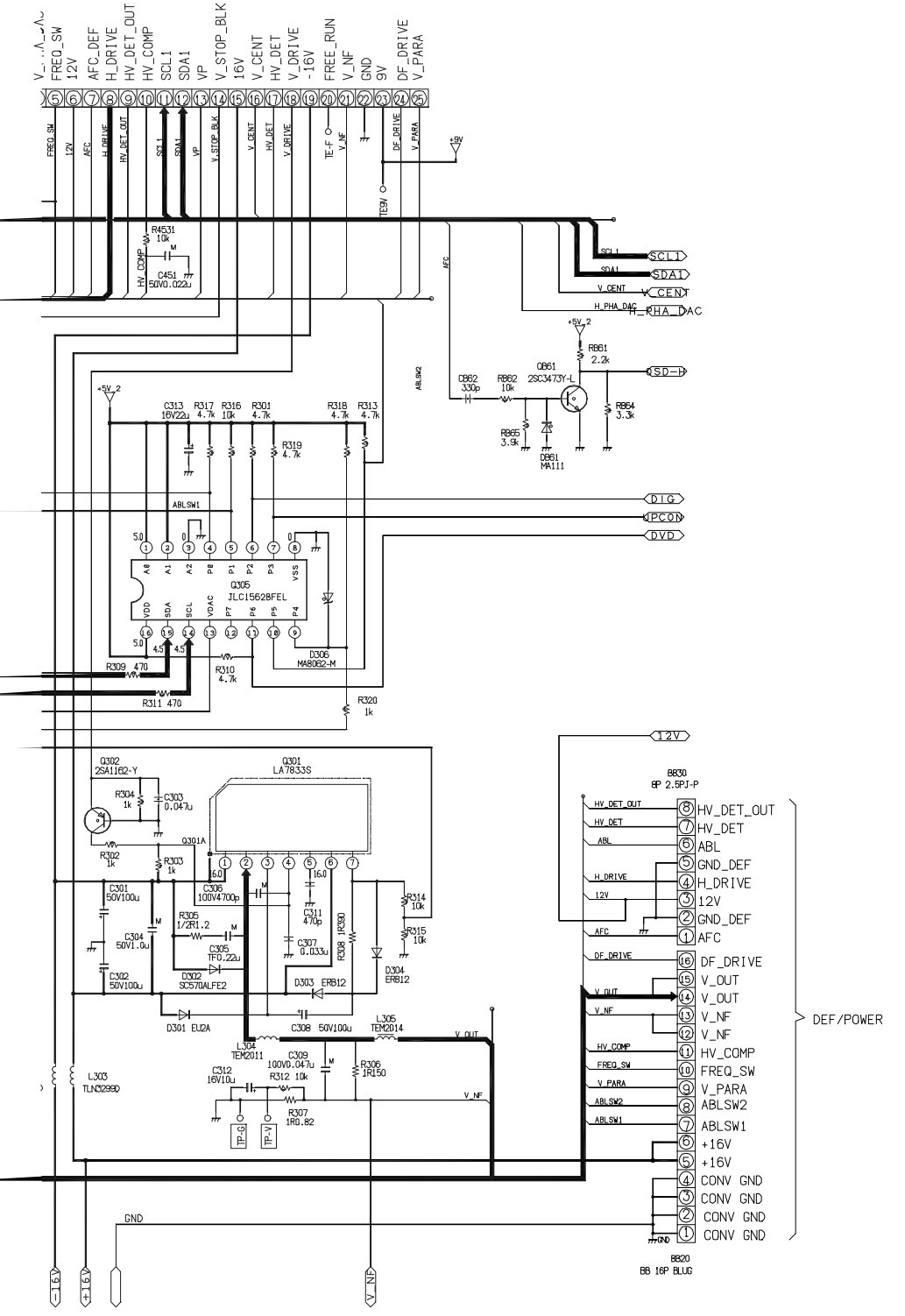

SIGNAL/CONVER(Vertical)(2/7)

50H81 serise

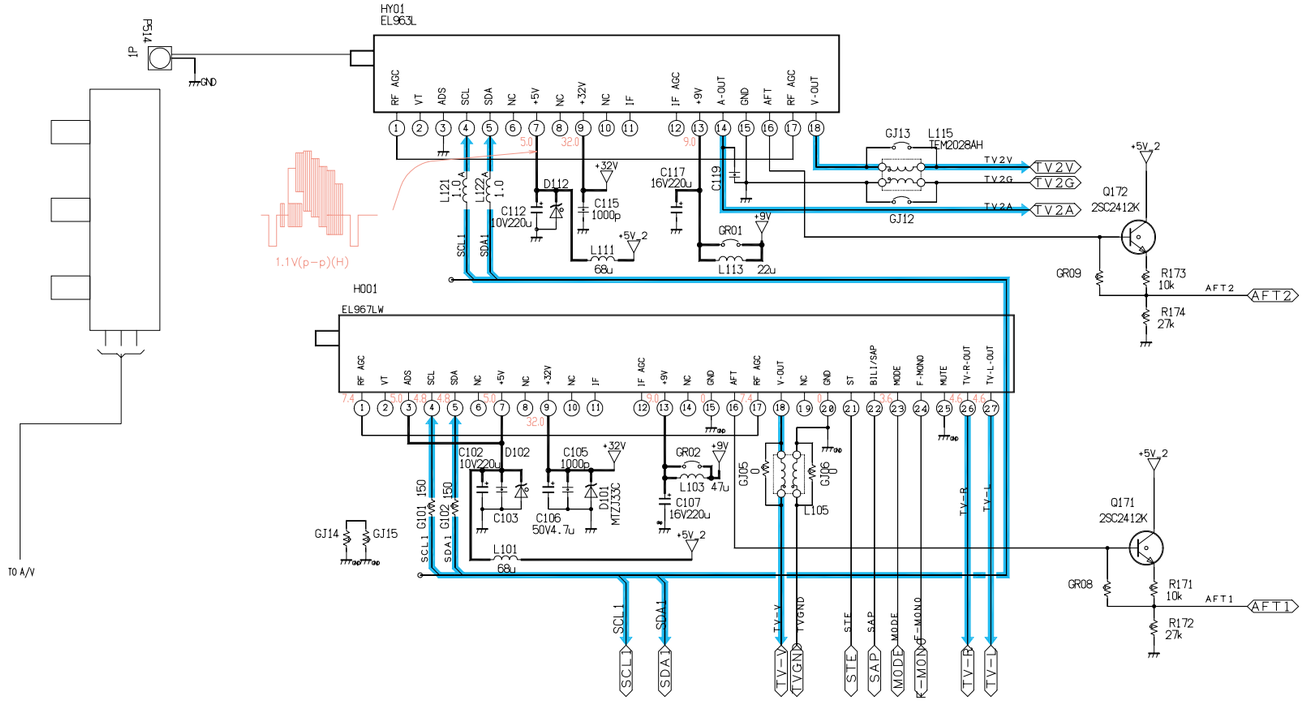

SIGNAL/CONVER(If) (3/7)

50H81serise

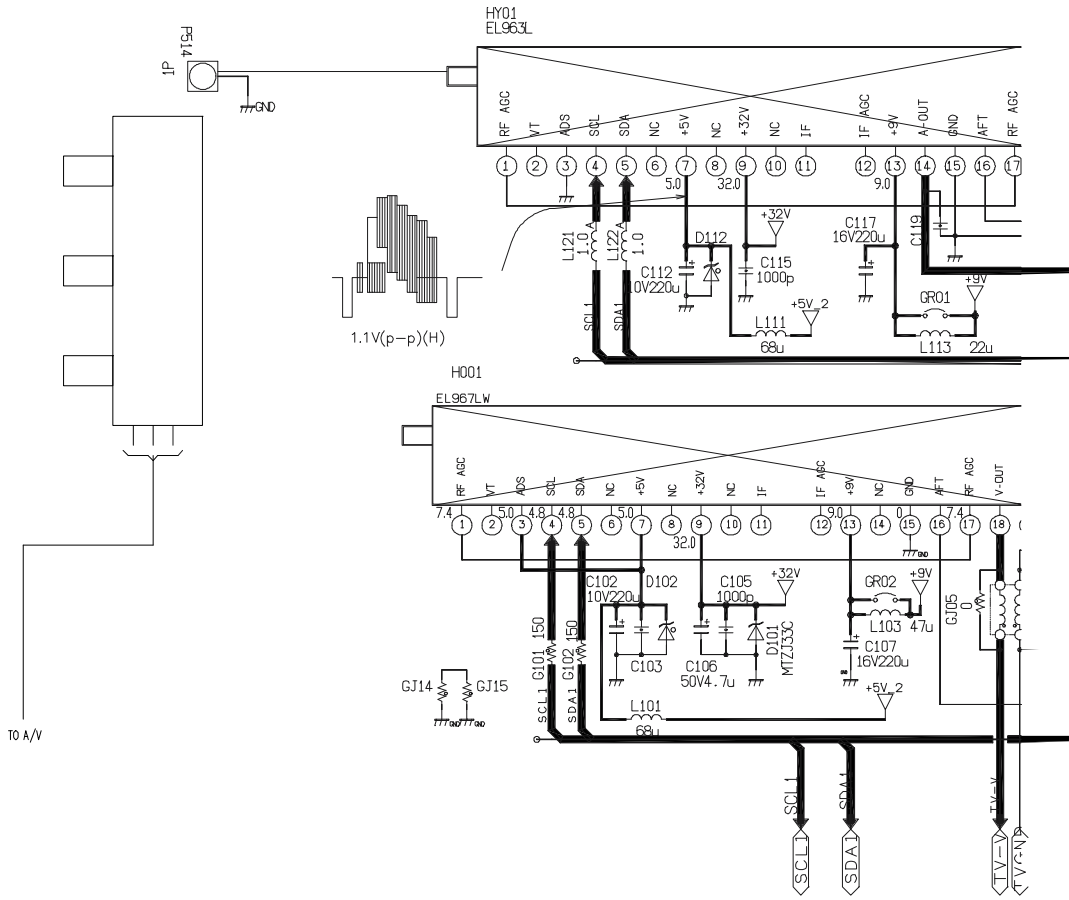
HY01
EL963L
RF AGC
VT
ADS
SCL
SDA
NC
+5V
NC
+32V
NC
IF
IF AGC
+9V
A-OUT
GND
AFT
RF AGC
5.0
32.0
9.0
L121 1.0
L122 1.0
D112
+32V
C117 16V220u
C119
C112 10V220u
C115 1000p
+9V
GR01
+5V_2
L111 68u
L113 22u
SCL1
SDA1
1.1V(p-p)(H)
H001
EL967LW
RF AGC
VT
ADS
SCL
SDA
NC
+5V
NC
+32V
NC
IF
IF AGC
+9V
NC
GND
AFT
RF AGC
V-OUT
7.4
5.0
4.8
4.8
5.0
32.0
9.0
0
7.4
C102 10V220u
D102
C105 1000p
+32V
GR02
+9V
L103 47u
GJ05 0
G101 150
G102 150
C103
C106 50V4.7u
D101 MTZJ33C
C107 16V220u
GJ14
GJ15
+5V_2
L101 68u
SCL1
SDA1
TV-V
TV-GND
1P
PS14
GND
TO A/V

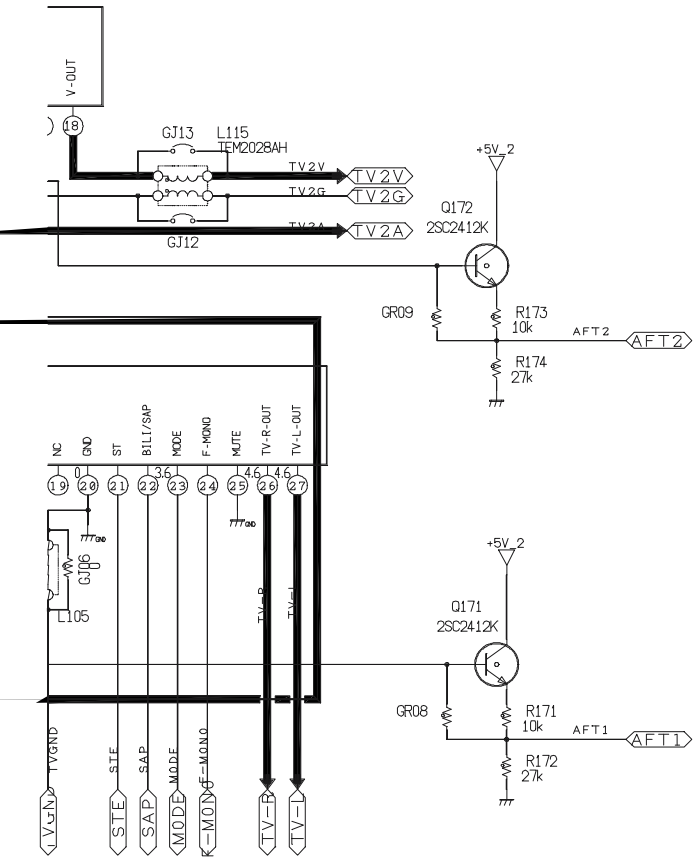

A

B

SIGNAL/CONVER(If) (3/7)

50H81serise

	RA08	RV38	RV39	CV37
43H71/43HX71 50H71/53H71 53HX71/61H71	No use	No use	No use	No use
42H81/50H81 50HX81/57H81 57HX81/65H81 65HX81	1K ohm	180K ohm	330K ohm	50V3.3uF

SIGNAL/CONVER(Maicon) (4/7)

50H81 serise

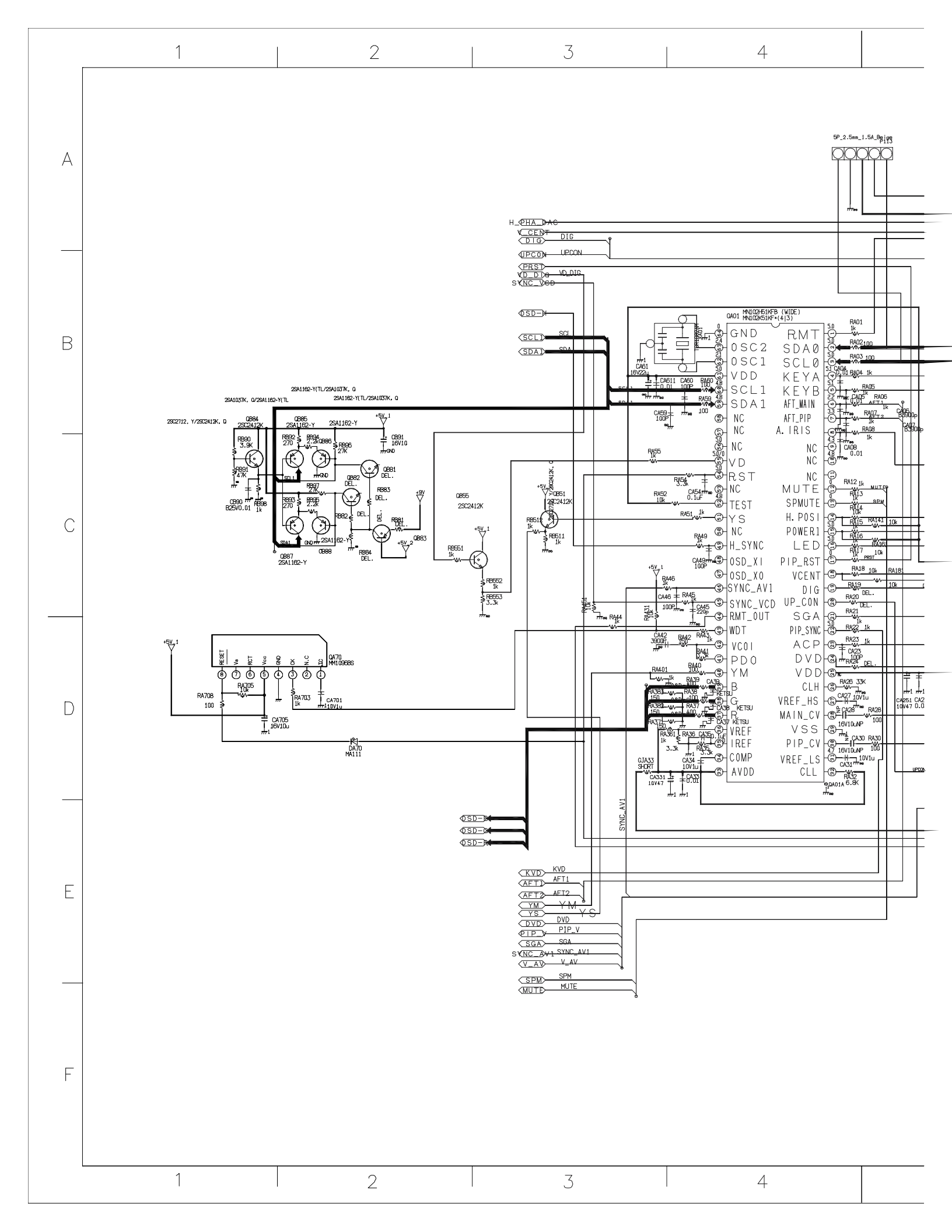
1
2
3
4
A
B
C
D
E
F
5P_2.5mm_1.5A_Beige
P113
H_PHA
V_CENT
DIG
UPCON
PRST
VD_DIG
SYNC_VCD
OSD-M
SCL1
SDA1
QA01 MN102H51KFB (WIDE)
MN102K51KF+(4)3)
GND
OSC2
OSC1
VDD
SCL1
SDA1
NC
NC
VD
RST
NC
TEST
YS
NC
H_SYNC
OSD_XI
OSD_XO
SYNC_AV1
SYNC_VCD
RMT_OUT
WDT
VCOI
PDO
YM
B
G
R
VREF
IREF
COMP
AVDD
RMT
SDA0
SCL0
KEYA
KEYB
AFT_MAIN
AFT_PIP
A. IRIS
NC
NC
NC
MUTE
SPMUTE
H. POSI
POWER1
LED
PIP_RST
VCENT
DIG
UP_CON
SGA
PIP_SYNC
ACP
DVD
VDD
CLH
VREF_HS
MAIN_CV
VSS
PIP_CV
VREF_LS
CLL
2SA1162-Y(TL/2SA1037K, Q
2SA1037K, Q/2SA1162-Y(TL
2SC2712, Y/2SC2412K, Q
QB84 2SC2412K
QB85 2SA1162-Y
QB86 2SA1162-Y
QB87 2SA1162-Y
QB88 2SA1162-Y
QB81 DEL.
QB82 DEL.
QB83 DEL.
QB55 2SC2412K
QB51 2SC2412K
QA70 MM1096BS
RESET
Vs
RCT
Vcc
GND
CK
N.C
FIL
DA70 MA111
KVD
AFT1
AFT2
YM
YS
DVD
PIP_V
SGA
SYNC_AV1
V_AV
SPM
MUTE
OSD-R
OSD-G
OSD-B
UPCON

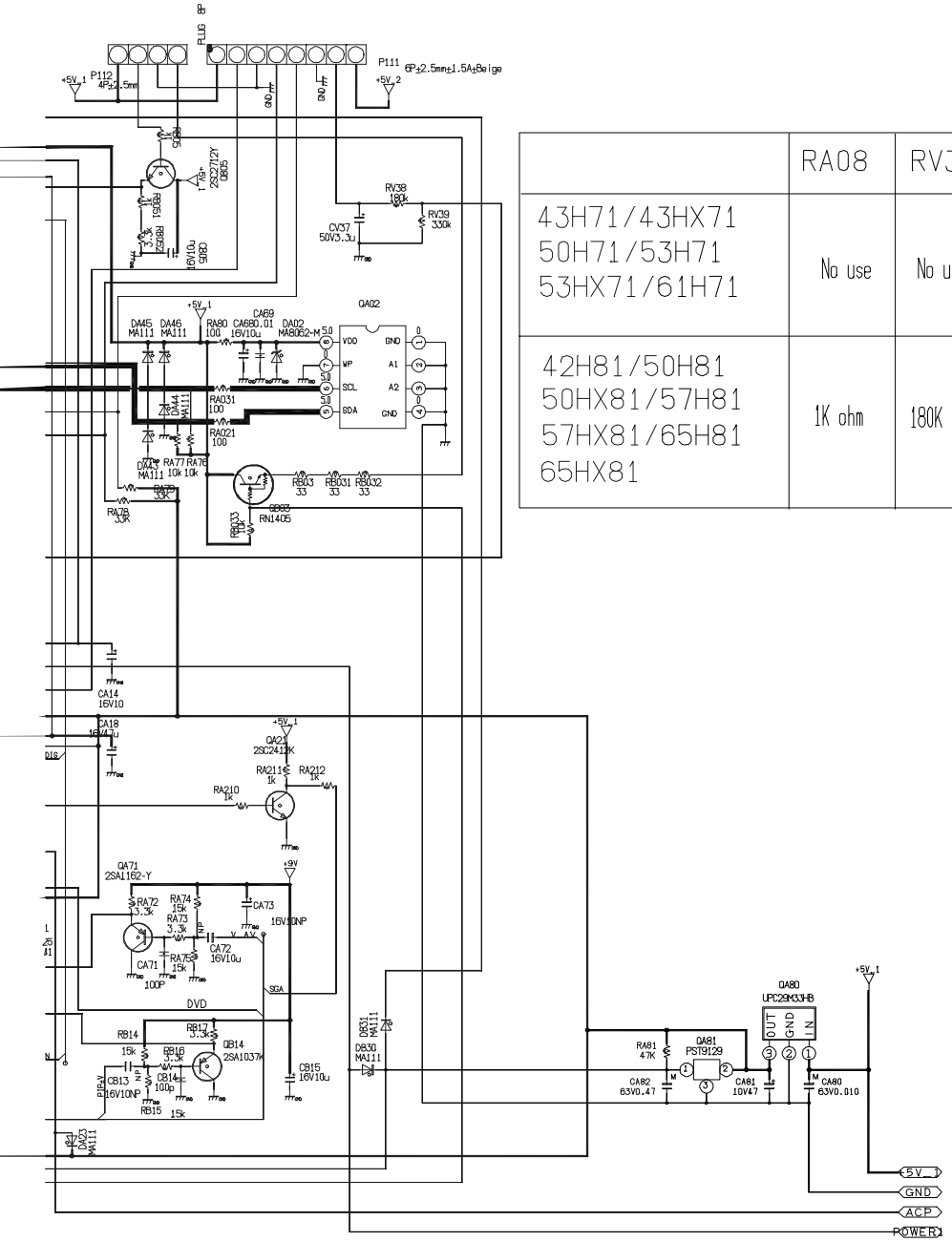

	RA08	RV38	RV39	CV37
43H71/43HX71 50H71/53H71 53HX71/61H71	No use	No use	No use	No use
42H81/50H81 50HX81/57H81 57HX81/65H81 65HX81	1K ohm	180K ohm	330K ohm	50V3.3uF

SIGNAL/CONVER(Maicon) (4/7)
50H81 serise

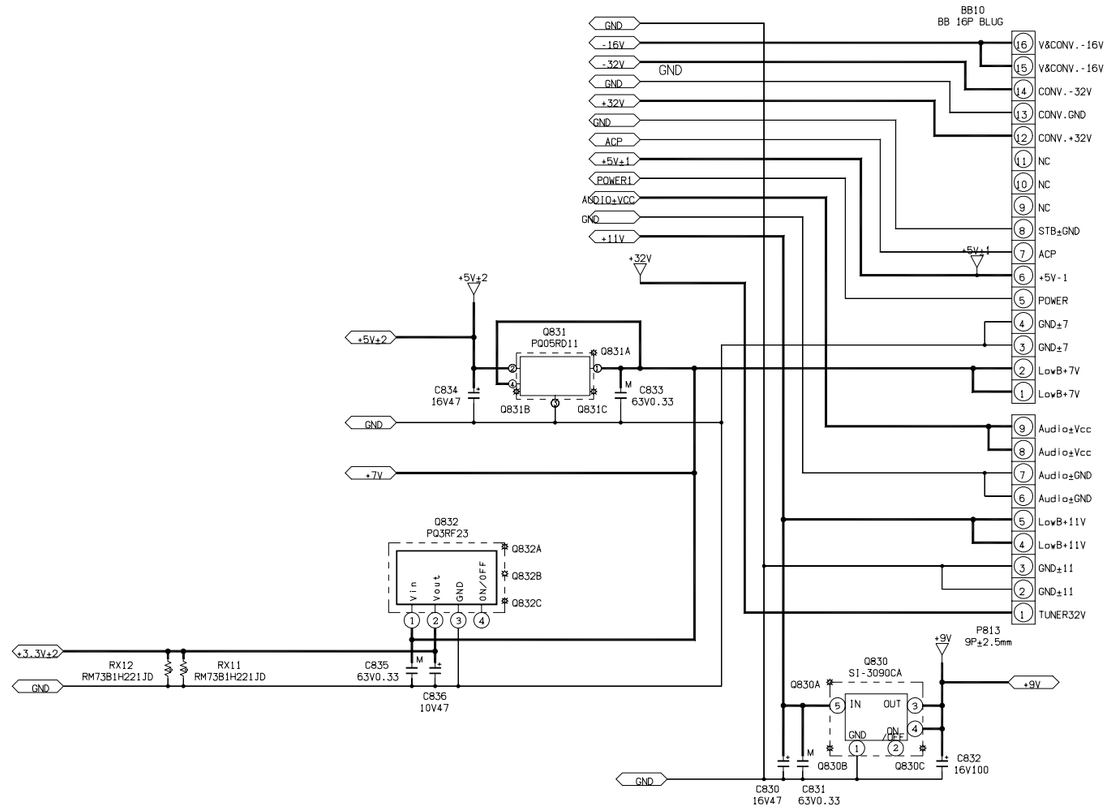

SIGNAL/CONVER(Power) (5/7)

50H81 series

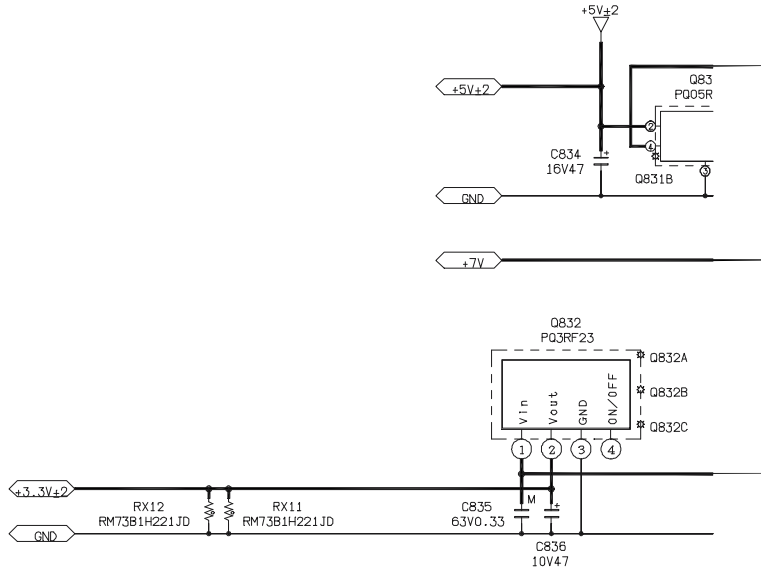
+5V+2
+5V+2
Q83
PQ05R
C834
16V47
Q831B
GND
+7V
Q832
PQ3RF23
Q832A
Q832B
Q832C
Vin
Vout
GND
ON/OFF
1
2
3
4
+3.3V+2
GND
RX12
RM73B1H221JD
RX11
RM73B1H221JD
C835
63V0.33
M
C836
10V47

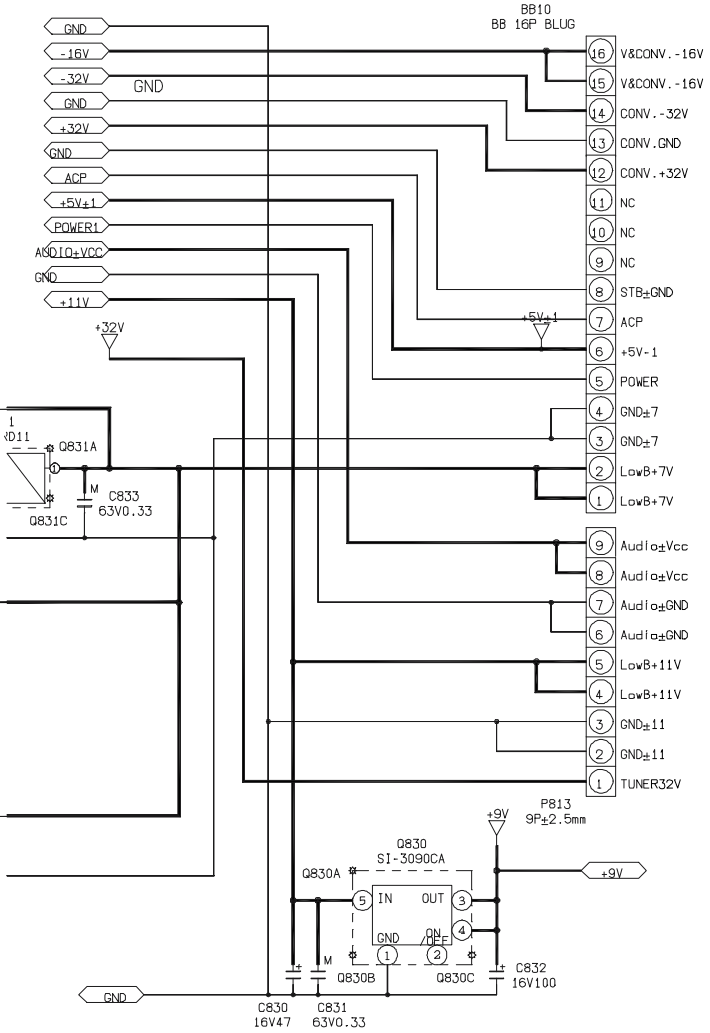

A

B

SIGNAL/CONVER(Power) (5/7)

50H81 series

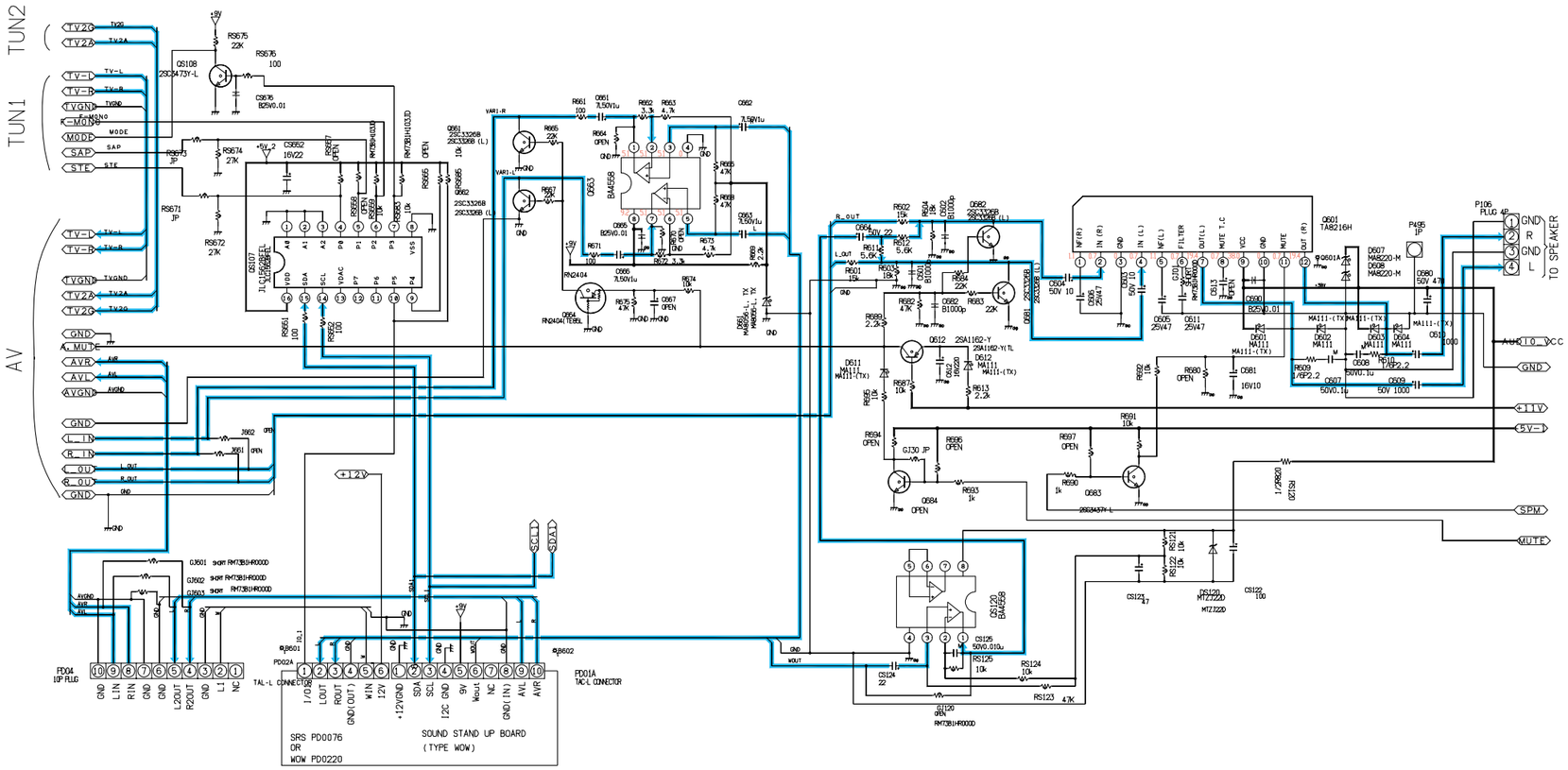

SIGNAL/CONVER(Audio)

50H81serise (6/7)

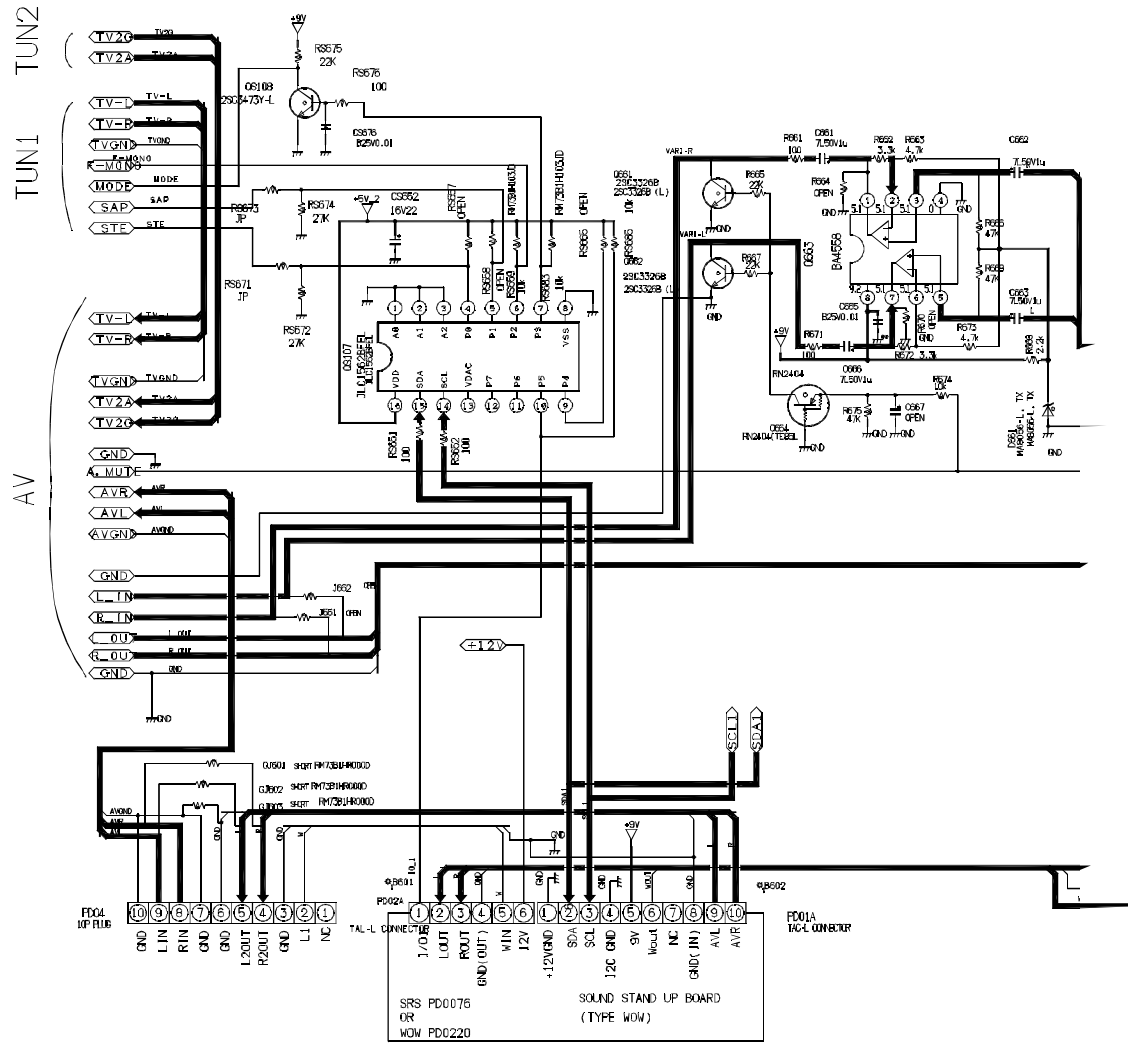
TUN2
TUN1
AV
TV2G
TV2A
TV-L
TV-R
TVGND
MODE
SAP
STE
GND
A_MUTE
AVR
AVL
AVGND
L_IN
R_IN
L_OUT
R_OUT
+12V
SCL
SDA
PD04
10P PLUG
GND
L IN
R IN
GND
GND
L2OUT
R2OUT
GND
LI
NC
PD024
TAL-L CONNECTOR
L/OUT
LOUT
ROUT
GND(OUT)
WIN
12V
+12V(GND
SDA
SCL
I2C GND
9V
Wout
NC
GND(IN)
AVL
AVR
PD01A
TAC-L CONNECTOR
SRS PD0076
OR
WOW PD0220
SOUND STAND UP BOARD
(TYPE WOW)

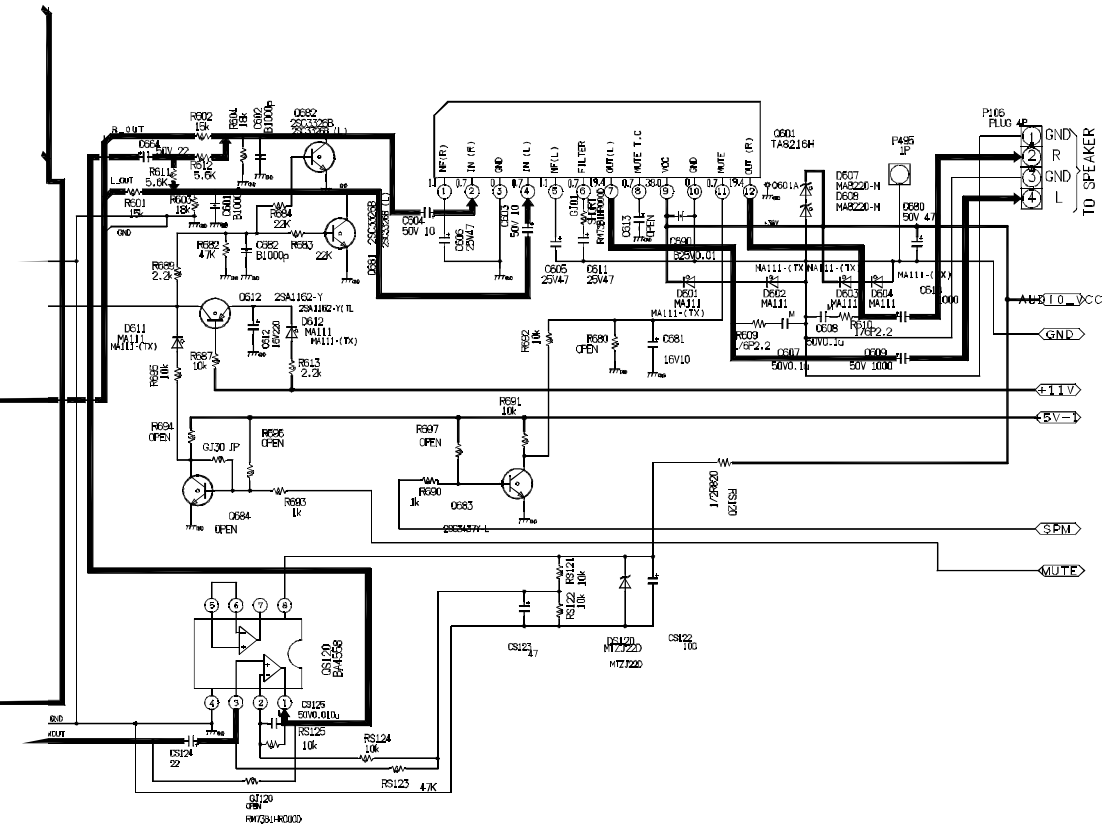

SIGNAL/CONVER(Audio)

50H81serise (6/7)

HYPER
PD0264

NEXT HYPER

AV
PD0075

A / V

SIGNAL/CONVER(Video) (7/7)
50H81serise

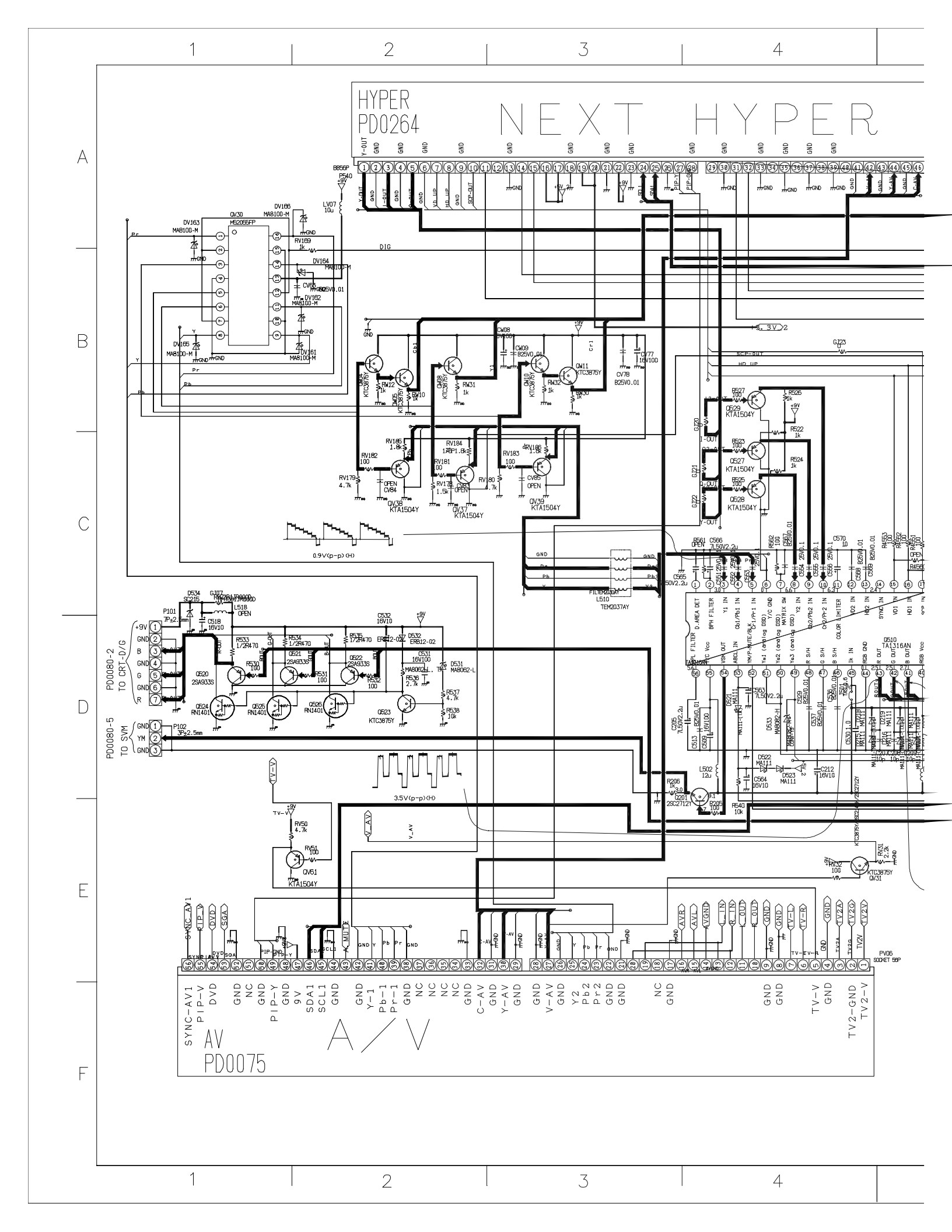
HYPER
PD0264
NEXT HYPER
AV
PD0075
A / V
PD0080-2
TO CRT-D/G
PD0080-5
TO SVM
SYNC-AV1
PIP-V
DVD
GND
NC
PIP-Y
9V
SDA1
SCL1
Y-1
Pb-1
Pr-1
C-AV
Y-AV
V-AV
Y2
Pb2
Pr2
TV-V
TV2-GND
TV2-V
SOCKET 56P

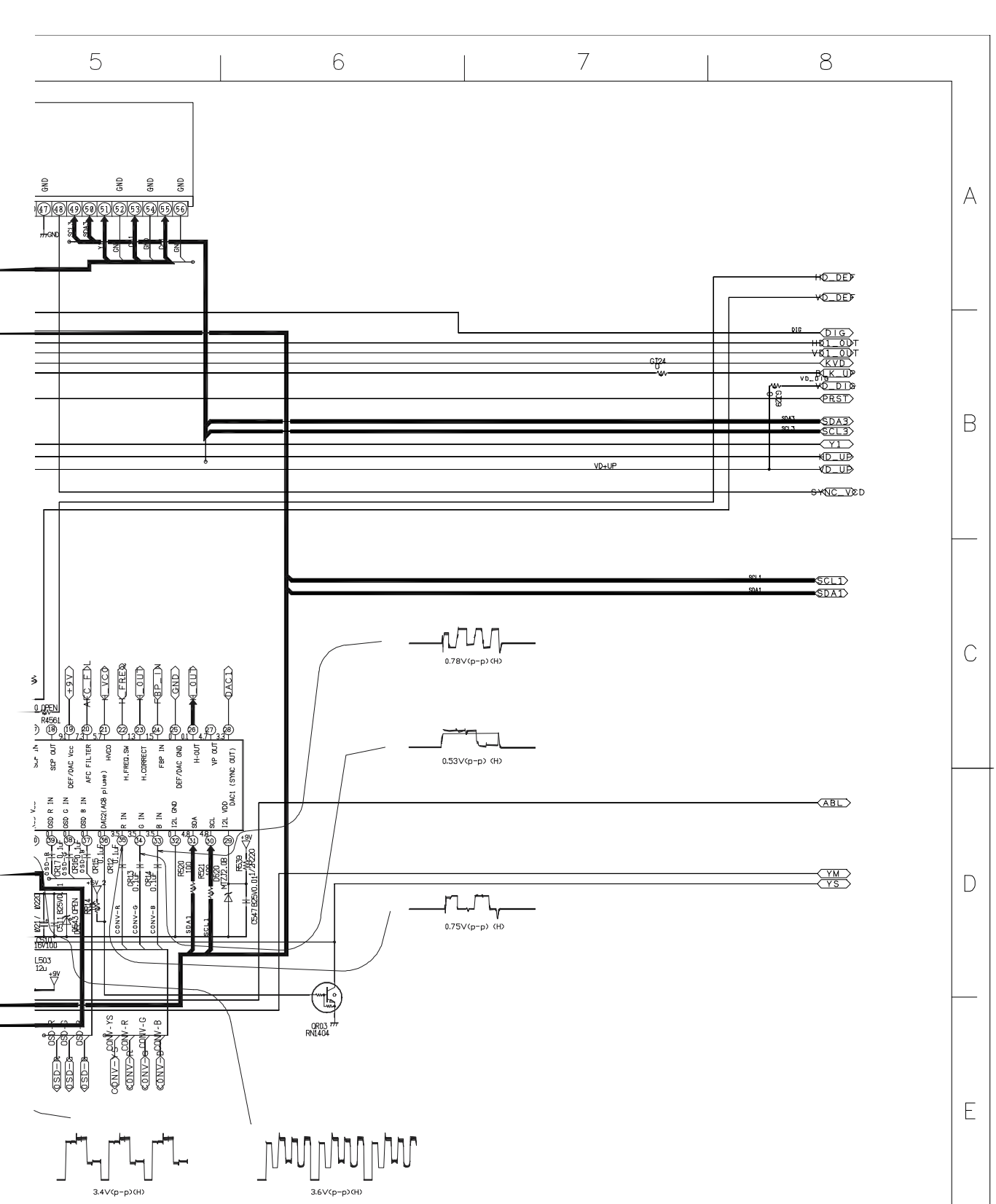

SIGNAL/CONVER(Video) (7/7)

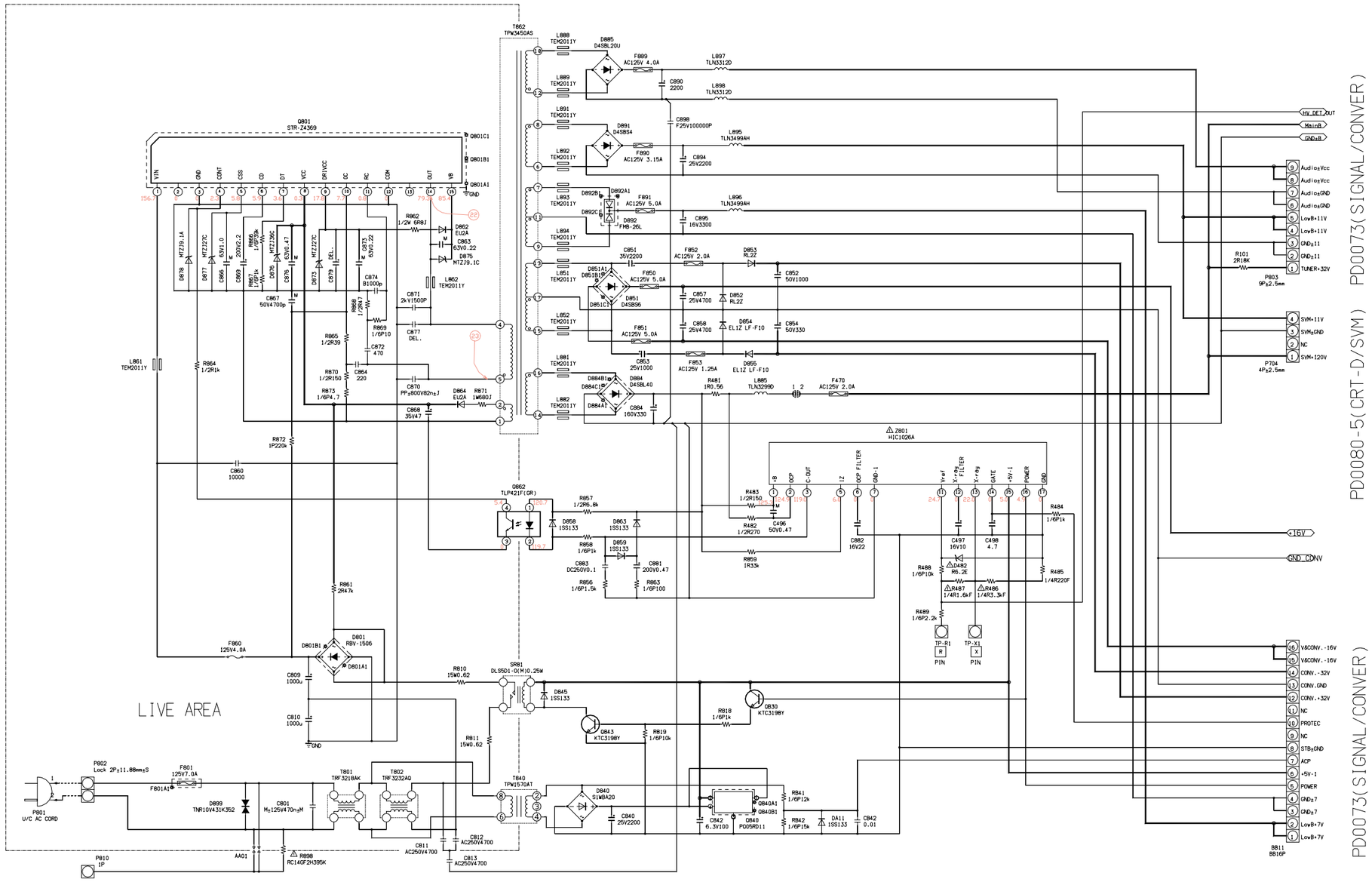

NOTE|

1. RESISTOR Resistance is shown in ohm |k = 1,000. M = 1,000,000 . All resistors are 1/6W and 5% tolerance carbon resistor,unless otherwise noted as the following marks.
   1/2R | Metal or Metal oxide of 1/2 watt
   1/2S | Solid of 1/2 watt
   1RF | Fuse resistor of 1 watt
   10W | Cement of 10 watts
   K = ±10% G = ±2% F = 1%

2. CAPACITOR Unless otherwise noted in schematic,all capacitor valuse less than 1 are expressed in μF,and the values more than 1 in pF.
   All capacitors are ceramic 50V, unless otherwise noted as the following marks.
   Electrolitic capacitor
   Mylar capacitor

3. The parts indicated with " △ " have special characteristics should be replaced with identical parts only.

4. This schematic diagram is the latest the time of copying, so it must be changed in acordance with all informed modification notices.

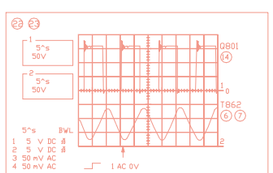

POWER/DEF(Power)(1/2)
50H81 serise

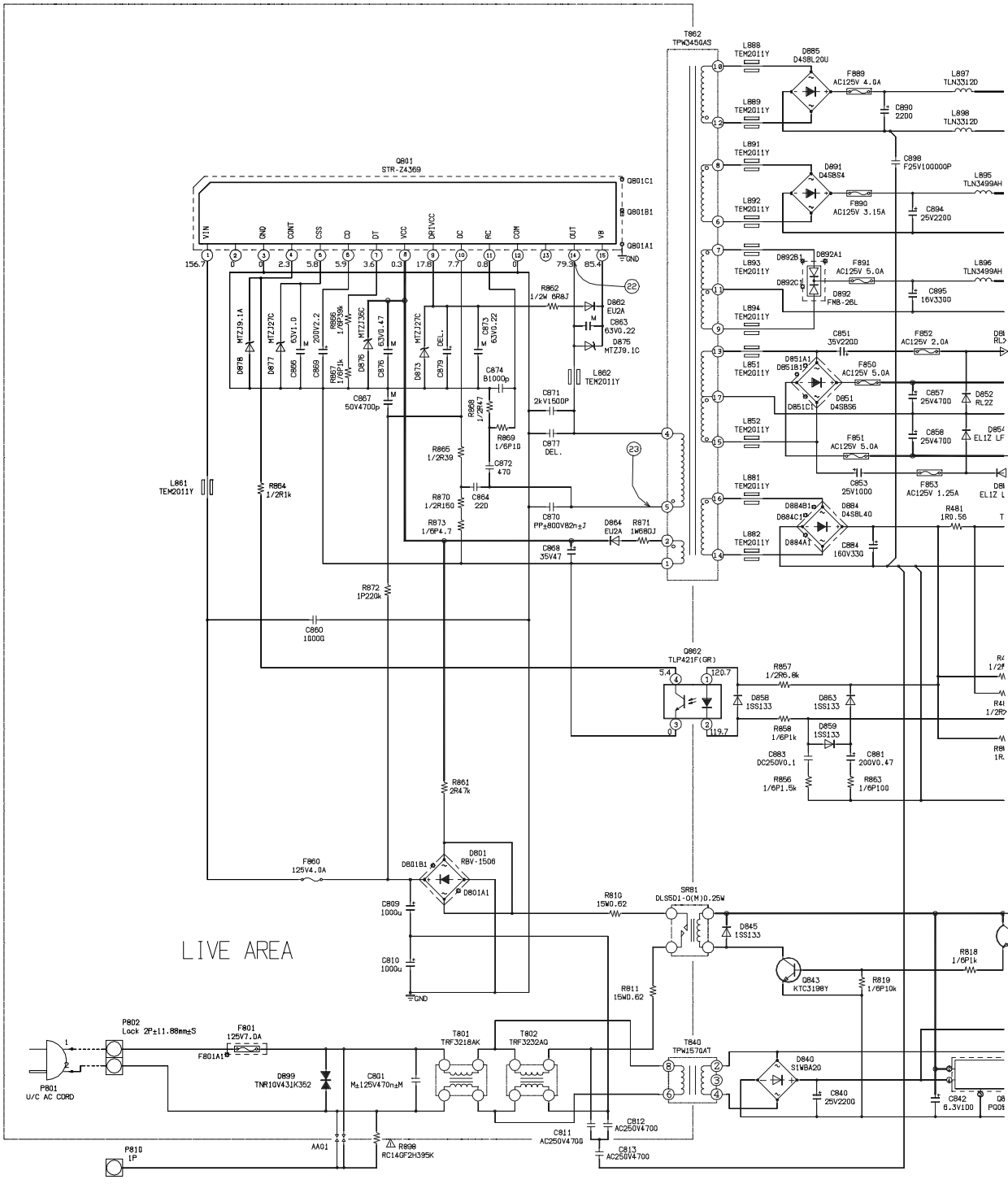

NOTE|

1. RESISTOR Resistance is shown in ohm (k = 1,000. M = 1,000,000) . All resistors are 1/6W and 5% tolerance carbon resistor,unless otherwise noted as the following marks.
   1/2R | Metal or Metal oxide of 1/2 watt
   1/2S | Solid of 1/2 watt
   1RF | Fuse resistor of 1 watt
   10W | Cement of 10 watts
   K = ±10% G = 2% F = 1%

2. CAPACITOR Unless otherwise noted in schematic,all capacitor values less than 1 are expressed in μF,and the values more than 1 in pF.
   All capacitors are ceramic 50V, unless otherwise noted as the following marks.
   Electrolitic capacitor Mylar capacitor

3. The parts indicated with " ⚠ " have special characteristics should be replaced with identical parts only.

4. This schematic diagram is the latest the time of copying, so it must be changet in acordance with all informed modification notices.

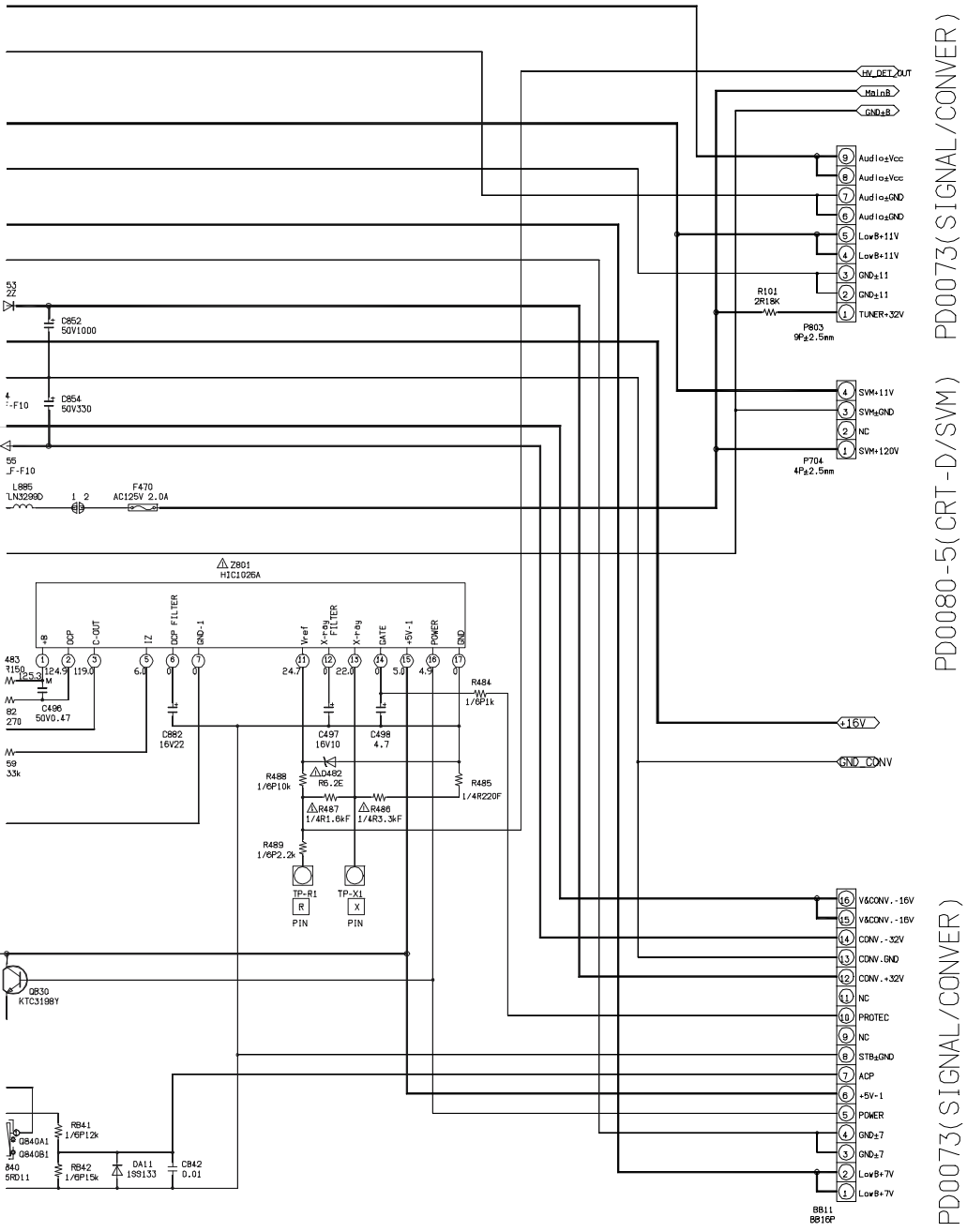

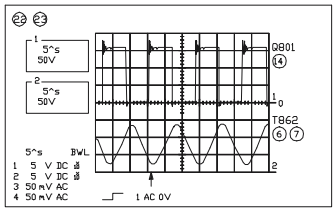

POWER/DEF(Power)(1/2)
50H81 serise

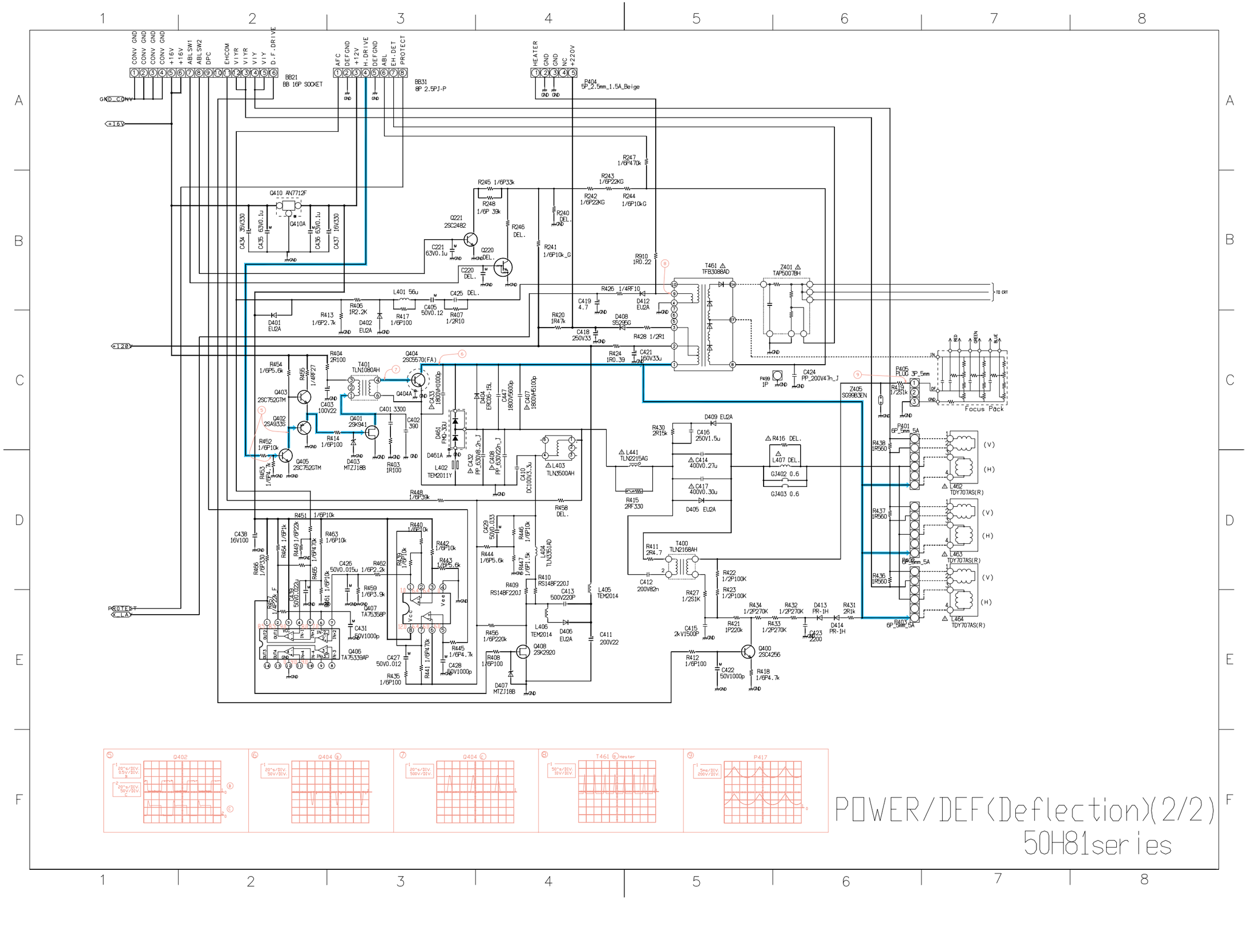
B821
BB 16P SOCKET
BB31
8P 2.5PJ-P
P404
5P_2.5mm_1.5A_Beige
CONV GND
+16V
ABLSW1
ABLSW2
DPC
EHCOM
V1YR
V1YR
V1Y
V1Y
D.F.DRIVE
AFC
DEFGND
+12V
H.DRIVE
DEFGND
ABL
EH.DET
PROTECT
HEATER
GND
NC
+220V
GND_CONV
+16V
+12V
PROTECT
Q410 AN7712F
Q410A
Q221 2SC2482
Q220 DEL.
T461 TFB3088AD
Z401 TAPS0078H
TO CRT
Q404 2SC5570(FA)
Q404A
T401 TLN1080AH
Q403 2SC752GTM
Q402 2SA933S
Q401 2SK941
Q405 2SC752GTM
Q407 TA75358P
Q406 TA75339AP
Q408 2SK2920
Q400 2SC4256
T400 TLN2168AH
D409 EU2A
D405 EU2A
D412 EU2A
D408 SB235G
D401 EU2A
D402 EU2A
D403 MTZJ18B
D404 ERC06-15L
D461 FMQ-32U
D461A
D407 MTZJ18B
D406 EU2A
L402 TEM2011Y
L403 TLN3500AH
L441 TLN2215AG
L404 TLN3514D
L405 TEM2014
L406 TEM2014
T451
GJ402 0.6
GJ403 0.6
P405 PLUG 3P_5mm
Focus Pack
RED
GREEN
BLUE
P401 6P_5mm_5A
L462 TDY707AS(R)
L463 TDY707AS(R)
L464 TDY707AS(R)
(V)
(H)
Z405 SG99B3EN
P499 1P
C424 PP_200V47n_J
C438 16V100
C434 35V330
C435 63V0.1u
C436 63V0.1u
C437 16V330
C439 50V0.033
C426 50V0.015u
C427 50V0.012
C428 50V1000p
C431 50V1000p
C422 50V1000p
C423 2200
C412 200V82n
C411 200V22
C413 500V220P
C415 2kV1500P
C416 250V1.5u
C414 400V0.27u
C417 400V0.30u
C419 4.7
C418 250V33
C421 160V33u
C401 3300
C402 390
C403 100V22
C405 50V0.12
C407 1800V5100p
C417 1800V5600p
C432 PP_630V8.2n_J
C408 PP_630V22n_J
C410 DC100V3.3u
C409 1800V4100p
C433 1800V4100p
R245 1/6P33k
R248 1/6P 39k
R247 1/6P470k
R243 1/6P22KG
R242 1/6P22KG
R244 1/6P10kG
R240 DEL.
R246 DEL.
R241 1/6P10k_G
R910 1R0.22
R426 1/4RF10
R420 1R47k
R428 1/2R1
R424 1R0.39
R430 2R15k
R416 DEL.
L407 DEL.
R415 2RF330
R458 DEL.
R404 2R100
R454 1/6P5.6k
R455 1/4RF27
R452 1/6P10k
R453 1/6P4.7k
R414 1/6P100
R403 1R100
R448 1/6P39k
R451 1/6P10k
R463 1/6P10k
R464 1/6P1k
R449 1/6P22k
R466 1/6P330
R465 1/6P470k
R462 1/6P2.2k
R459 1/6P3.9k
R440 1/6P10k
R442 1/6P10k
R443 1/6P5.6k
R439 1/6P10k
R441 1/6P470k
R445 1/6P4.7k
R435 1/6P100
R429 50V0.033
R444 1/6P5.6k
R446 1/6P10k
R447 1/6P1.5k
R410 RS14BF220J
R409 RS14BF220J
R456 1/6P220k
R408 1/6P100
R422 1/2P100K
R423 1/2P100K
R427 1/2S1K
R421 1P220k
R434 1/2P270K
R432 1/2P270K
R433 1/2P270K
R431 2R1k
R412 1/6P100
R418 1/6P4.7k
R411 2R4.7
R437 1R560
R436 1R560
R438 1R560
R439 1/6P10k
R413 1/6P2.7k
R417 1/6P100
R407 1/2R10
R401 1/6P5.6k
R402 1/6P10k
R403 1/6P4.7k
L401 56u
C220 DEL.
C221 63V0.1u
C425 DEL.
C410A
C436A
C437A
C434A
C435A
C438A
C439A
C426A
C427A
C428A
C431A
C422A
C423A
C412A
C411A
C413A
C415A
C416A
C414A
C417A
C419A
C418A
C421A
C401A
C402A
C403A
C405A
C407A
C417A
C432A
C408A
C410A
C409A
C433A
R404A
R454A
R455A
R452A
R453A
R414A
R403A
R448A
R451A
R463A
R464A
R449A
R466A
R465A
R462A
R459A
R440A
R442A
R443A
R439A
R441A
R445A
R435A
R429A
R444A
R446A
R447A
R410A
R409A
R456A
R408A
R422A
R423A
R427A
R421A
R434A
R432A
R433A
R431A
R412A
R418A
R411A
R437A
R436A
R438A
R439A
R413A
R417A
R407A
R401A
R402A
R403A
R426A
R420A
R428A
R424A
R430A
R416A
R415A
R458A
L407A
L401A
D409A
D405A
D412A
D408A
D401A
D402A
D403A
D404A
D461A
D407A
D406A
L402A
L403A
L441A
L404A
L405A
L406A
T451A
GJ402A
GJ403A
P405A
P401A
L462A
L463A
L464A
Z401A
Z405A
P499A
C424A
Q410A
Q221A
Q220A
Q404A
Q403A
Q402A
Q401A
Q405A
Q407A
Q406A
Q408A
Q400A
T400

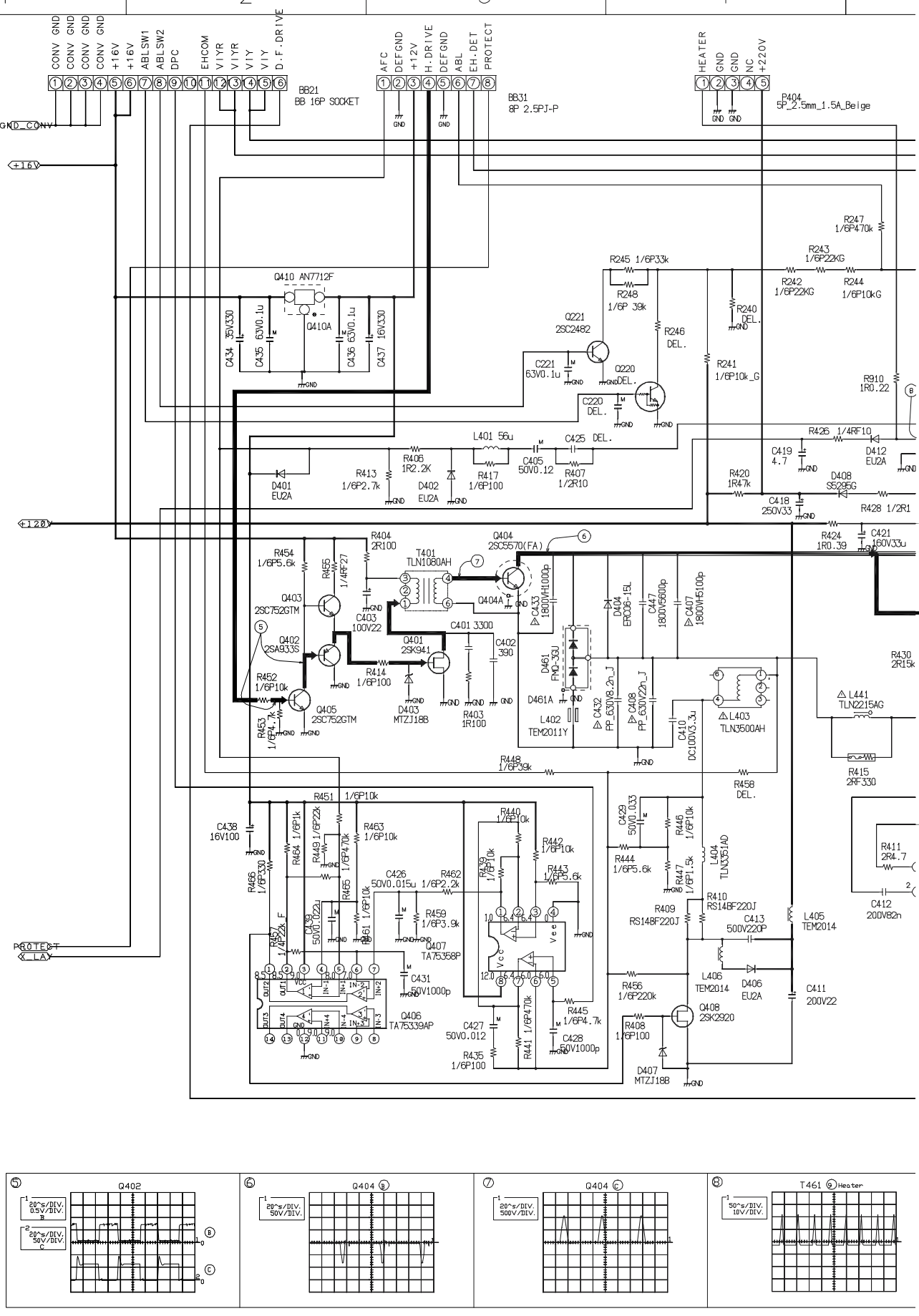
CONV GND
CONV GND
CONV GND
CONV GND
+16V
+16V
ABLSW1
ABLSW2
DPC
EHCOM
VIYR
VIYR
VIY
VIY
D.F.DRIVE
BB21
BB 16P SOCKET
AFC
DEFGND
+12V
H.DRIVE
DEFGND
ABL
EH.DET
PROTECT
BB31
8P 2.5PJ-P
HEATER
GND
GND
NC
+220V
P404
5P_2.5mm_1.5A_Beige
GND_CONV
+16V
+12V
PROTECT
X_LA
Q410 AN7712F
Q410A
C434 35V330
C435 63V0.1u
C436 63V0.1u
C437 16V330
Q221
2SC2482
C221
63V0.1u
Q220
DEL.
C220
DEL.
R245 1/6P33k
R248
1/6P 39k
R246
DEL.
R247
1/6P470k
R243
1/6P22KG
R242
1/6P22KG
R244
1/6P10kG
R240
DEL.
R241
1/6P10k_G
R910
1R0.22
L401 56u
C405
50V0.12
C425 DEL.
R406
1R2.2K
R407
1/2R10
R417
1/6P100
R413
1/6P2.7k
D401
EU2A
D402
EU2A
R426 1/4RF10
C419
4.7
D412
EU2A
R420
1R47k
D408
S5295G
C418
250V33
R428 1/2R1
R424
1R0.39
C421
160V33u
R454
1/6P5.6k
R455
1/4RF27
R404
2R100
T401
TLN1080AH
Q404
2SC5570(FA)
Q404A
C433
1800VH1000p
Q403
2SC752GTM
C403
100V22
Q402
2SA933S
C401 3300
Q401
2SK941
C402
390
R414
1/6P100
D403
MTZJ18B
R403
1R100
R452
1/6P10k
R453
1/6P4.7k
Q405
2SC752GTM
D461
FMG-36U
D461A
L402
TEM2011Y
C432
FP_630V8.2n_J
C408
FP_630V22n_J
D404
ERC06-15L
C447
1800V5600p
C407
1800VH5100p
C410
DC100V3.3u
L403
TLN3500AH
R430
2R15k
L441
TLN2215AG
R415
2RF330
R448
1/6P39k
R458
DEL.
R451 1/6P10k
C438
16V100
R464 1/6P1k
R449 1/6P22k
R463
1/6P10k
R466
1/6P330
R465
1/6P470k
C426
50V0.015u
R462
1/6P2.2k
R461
1/6P10k
C439
50V0.022u
R459
1/6P3.9k
Q407
TA75358P
C431
50V1000p
Q406
TA75339AP
R435
1/6P100
C427
50V0.012
R441 1/6P470k
C428
50V1000p
R445
1/6P4.7k
R440
1/6P10k
R439
1/6P10k
R442
1/6P10k
R443
1/6P5.6k
C429
50V0.033
R446
1/6P10k
R444
1/6P5.6k
R447
1/6P1.5k
L404
TLN3351AD
R411
2R4.7
C412
200V82n
R410
RS14BF220J
R409
RS14BF220J
C413
500V220P
L405
TEM2014
L406
TEM2014
D406
EU2A
C411
200V22
R456
1/6P220k
R408
1/6P100
Q408
2SK2920
D407
MTZJ18B
⑤ Q402
20^s/DIV.
0.5V/DIV.
B
20^s/DIV.
50V/DIV.
C
⑥ Q404 B
20^s/DIV.
50V/DIV.
⑦ Q404 C
20^s/DIV.
500V/DIV.
⑧ T461 9 Heater
50^s/DIV.
10V/DIV.

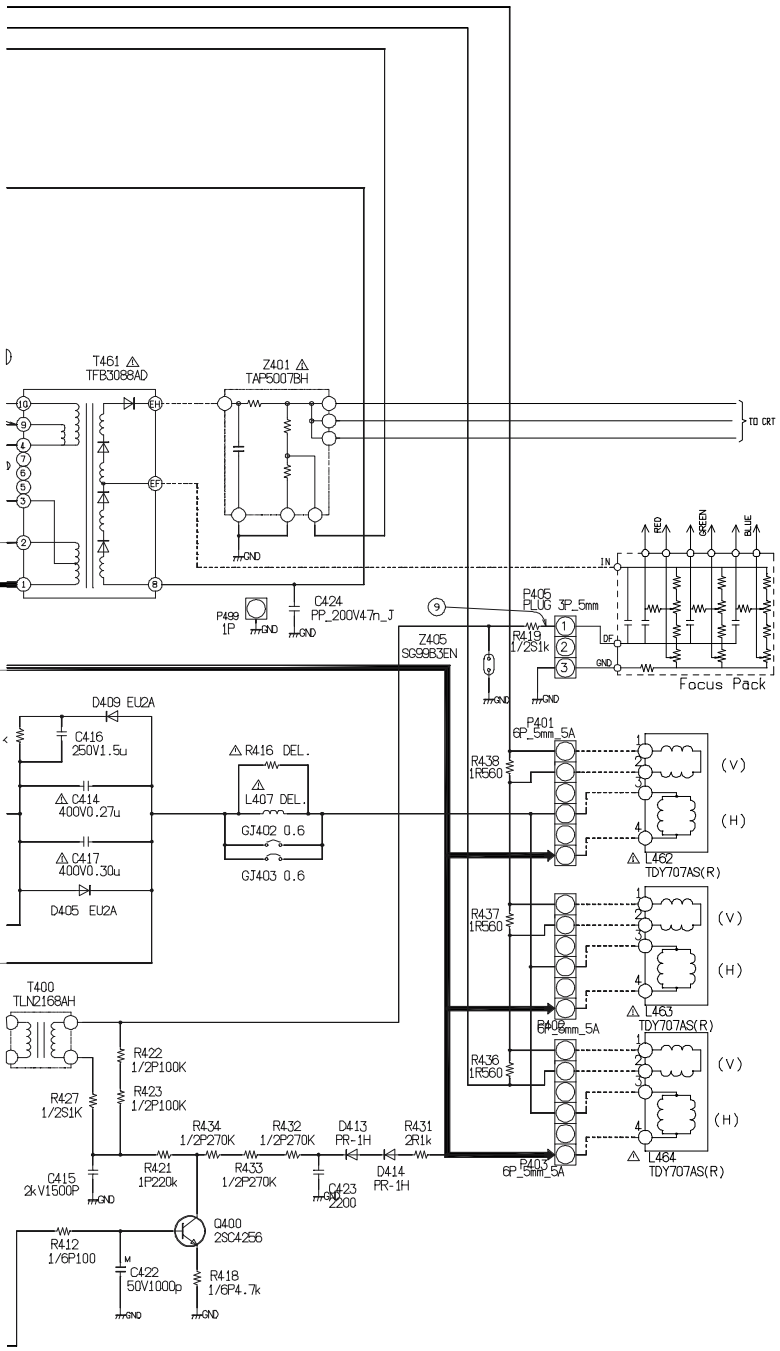

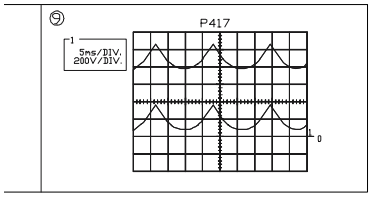

POWER/DEF(Deflection)(2/2)

50H81series

DPC
PD0077

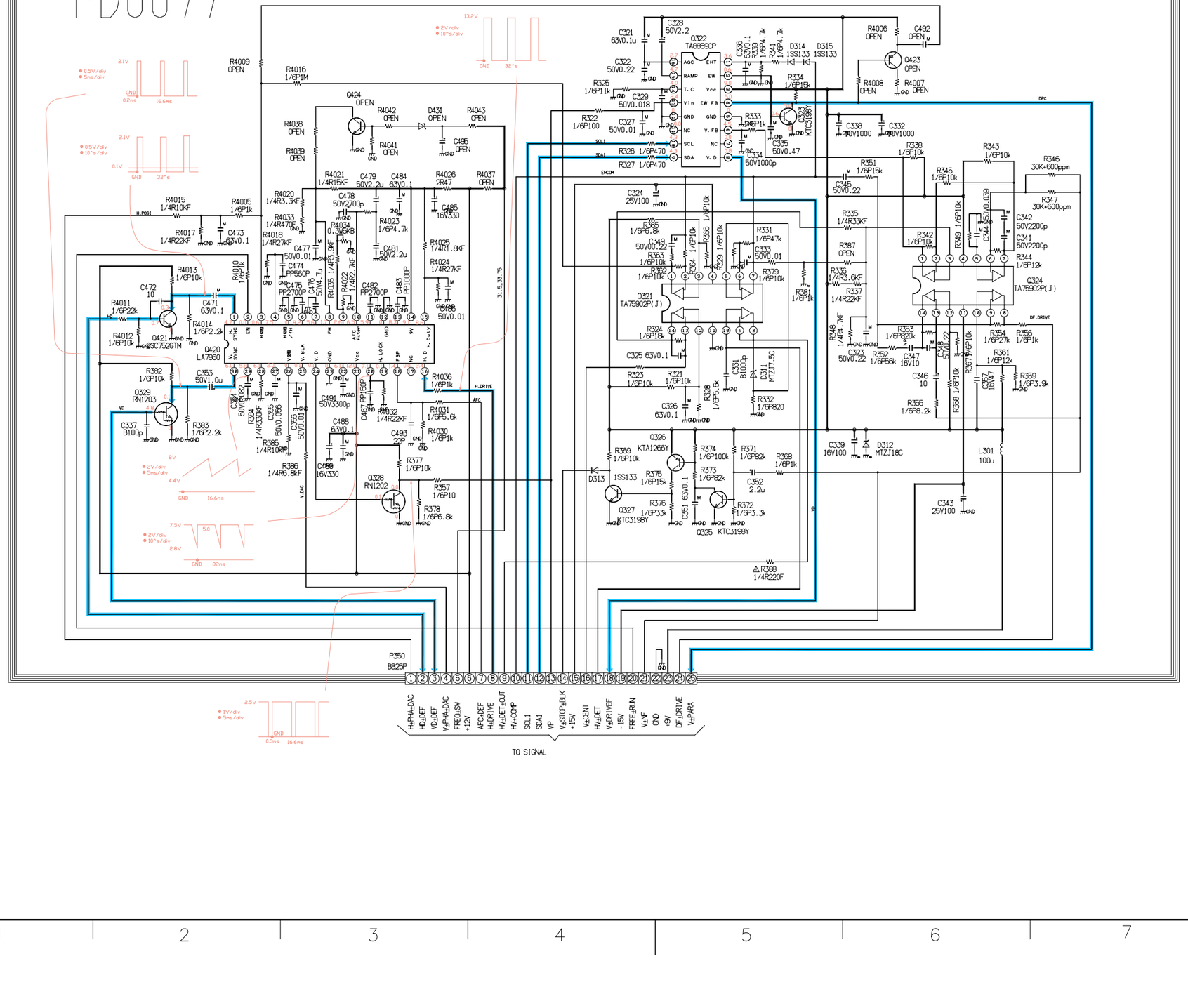

DPC
50H81 serise

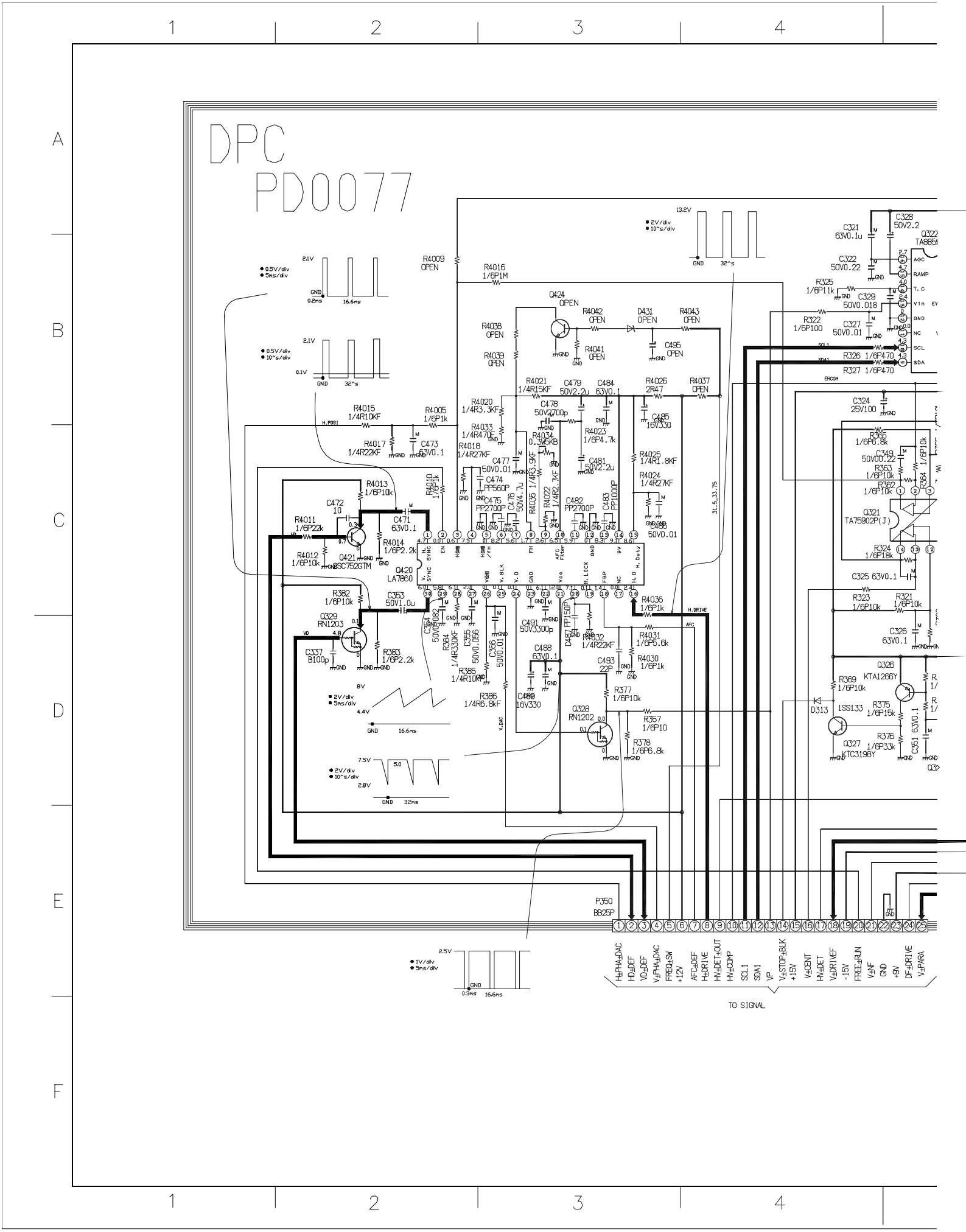
DPC
PD0077
P350
BB25P
TO SIGNAL
H+PHA+DAC
HD+DEF
VD+DEF
V+PHA+DAC
FREQ+SW
+12V
AFC+DEF
H+DRIVE
HV+DET+OUT
HV+COMP
SCL1
SDA1
VP
V+STOP+BLK
+15V
V+CENT
HV+DET
V+DRIVEF
-15V
FREE+RUN
V+NF
GND
+9V
DF+DRIVE
V+PARA
Q420
LA7860
Q421
2SC752GTM
Q329
RN1203
Q328
RN1202
Q321
TA75902P(J)
Q326
KTA1266Y
Q327
KTC3198Y
Q424
OPEN
D431
OPEN
D313
1SS133
R4009
OPEN
R4016
1/6P1M
R4038
OPEN
R4039
OPEN
R4042
OPEN
R4041
OPEN
R4043
OPEN
C495
OPEN
R4015
1/4R10KF
R4005
1/6P1k
R4017
1/4R22KF
C473
63V0.1
R4021
1/4R15KF
C479
50V2.2u
C484
63V0.1
R4026
2R47
R4037
OPEN
R4020
1/4R3.3KF
C478
50V2700p
R4033
1/4R470F
R4034
0.3W5KB
R4023
1/6P4.7k
C485
16V330
R4018
1/4R27KF
C477
50V0.01
C481
50V2.2u
R4025
1/4R1.8KF
R4024
1/4R27KF
C474
PP560P
C475
PP2700P
C476
50V4.7u
R4035
1/4R3.9KF
R4022
1/4R2.7KF
C482
PP2700P
C483
PP1000P
C486
50V0.01
R4013
1/6P10k
C472
10
C471
63V0.1
R4011
1/6P22k
R4014
1/6P2.2k
R4012
1/6P10k
R382
1/6P10k
C353
50V1.0u
C337
B100p
R383
1/6P2.2k
C354
50V0.082
R384
1/4R330KF
C355
50V0.056
C356
50V0.01
R385
1/4R10KF
R386
1/4R6.8kF
C491
50V3300p
C487
PP150P
R4032
1/4R22KF
R4036
1/6P1k
R4031
1/6P5.6k
R4030
1/6P1k
C488
63V0.1
C493
22P
C489
16V330
R377
1/6P10k
R357
1/6P10
R378
1/6P6.8k
C321
63V0.1u
C328
50V2.2
C322
50V0.22
R325
1/6P11k
C329
50V0.018
R322
1/6P100
C327
50V0.01
R326 1/6P470
R327 1/6P470
C324
25V100
R365
1/6P6.8k
C349
50V00.22
R363
1/6P10k
R362
1/6P10k
R364
1/6P10k
R324
1/6P18k
C325 63V0.1
R323
1/6P10k
R321
1/6P10k
C326
63V0.1
R369
1/6P10k
R375
1/6P15k
R376
1/6P33k
C351 63V0.1
H.POSI
H.DRIVE
AFC
V.DAC
EHCOM
SCL1
SDA1
AGC
RAMP
T.C
Vin
GND
NC
SCL
SDA
31.5_33.75
13.2V
2V/div
10^s/div
32^s
0.5V/div
5ms/div
2.1V
0.2ms
16.6ms
0.1V
8V
4.4V
7.5V
5.0
2.8V
2.5V
1V/div
0.3ms

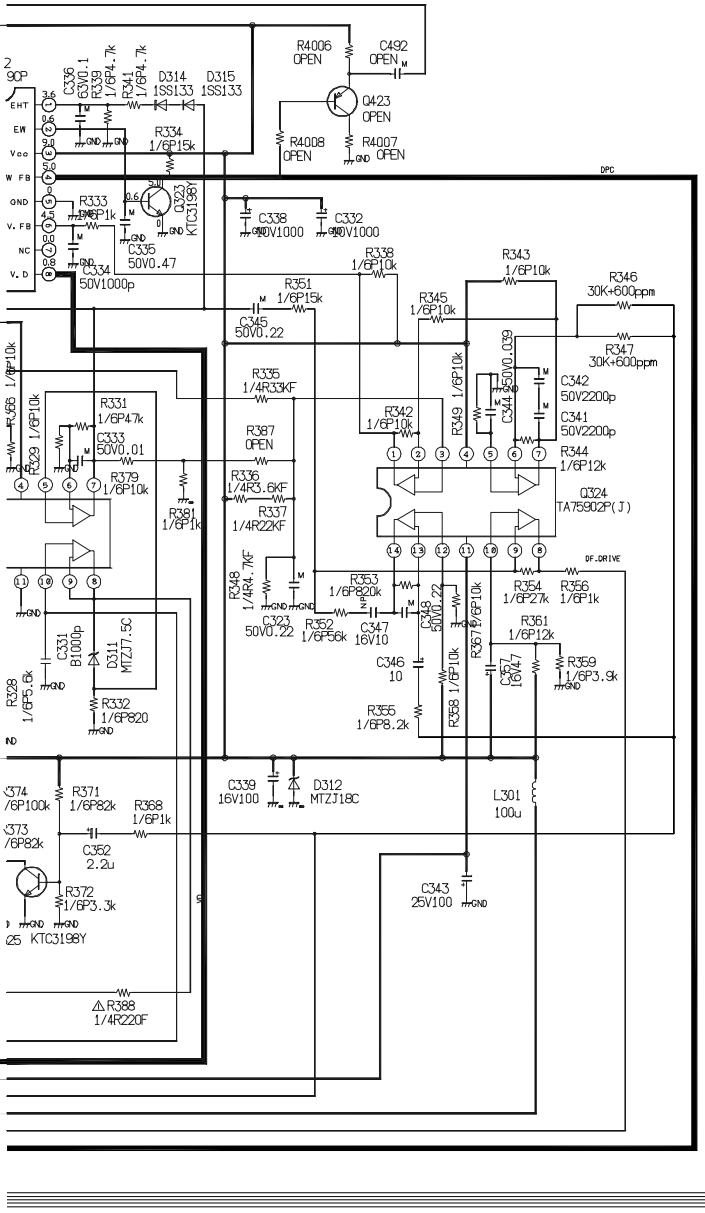

DPC

50H81 serise

PV01 JACK 2SSP

PV03 JACK 7P

PV04 JACK 5P

PV08 PIN JACK

PV51 PLUG 6P

PV50 PLUG 8P

P105 3P

PV12 9P

PV05 56P

Q151 2SA933S

Q152 2SC1740S

E2

E1

COLOR STREAM1

M.OUT

VARI AUDIO OUT

CENTER IN

COLOR STREAM2

TA8931CN

AV
50H81series

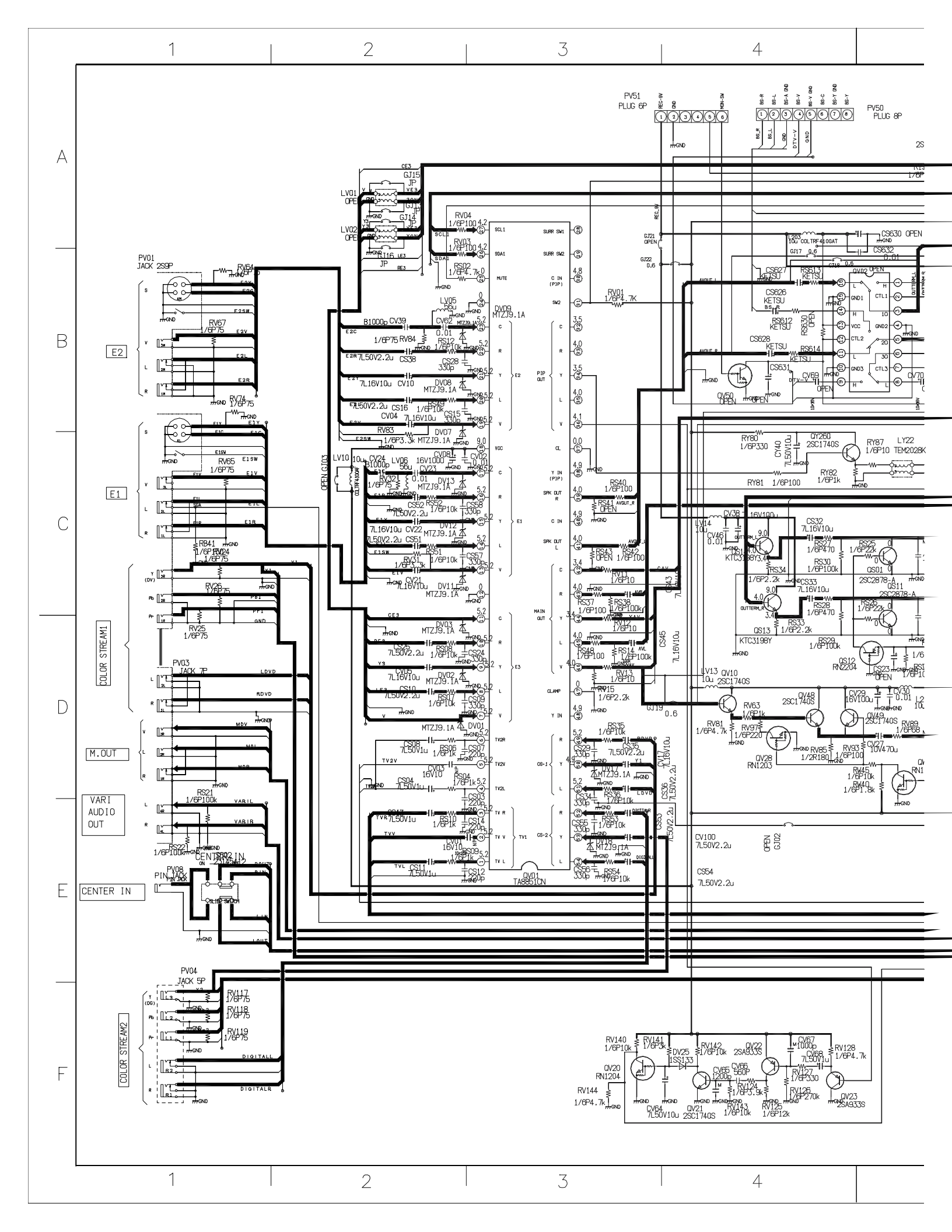

PV51
PLUG 6P
PV50
PLUG 8P
PV01
JACK 2S9P
E2
E1
COLOR STREAM1
PV03
JACK 7P
M.OUT
VARI
AUDIO
OUT
CENTER IN
PV08
PIN JACK
PV04
JACK 5P
COLOR STREAM2
QV01
TA8851CN
QV50
OPEN
QV02
OPEN
QV260
2SC1740S
LY22
TEM2028K
QV10
2SC1740S
QV48
2SC1740S
QV49
2SC1740S
QV28
RN1203
QV20
RN1204
QV21
2SC1740S
QV22
2SA933S
QV23
2SA933S
QS01
2SC2878-A
QS11
2SC2878-A
QS13
KTC3198Y
QS12
RN2204
CS630 OPEN
CS632
CS627
KETSU
CS626
KETSU
CS628
KETSU
CS631
CS69
OPEN
CV100
7L50V2.2u
CS54
7L50V2.2u
OPEN
GJ02
OPEN GJ03

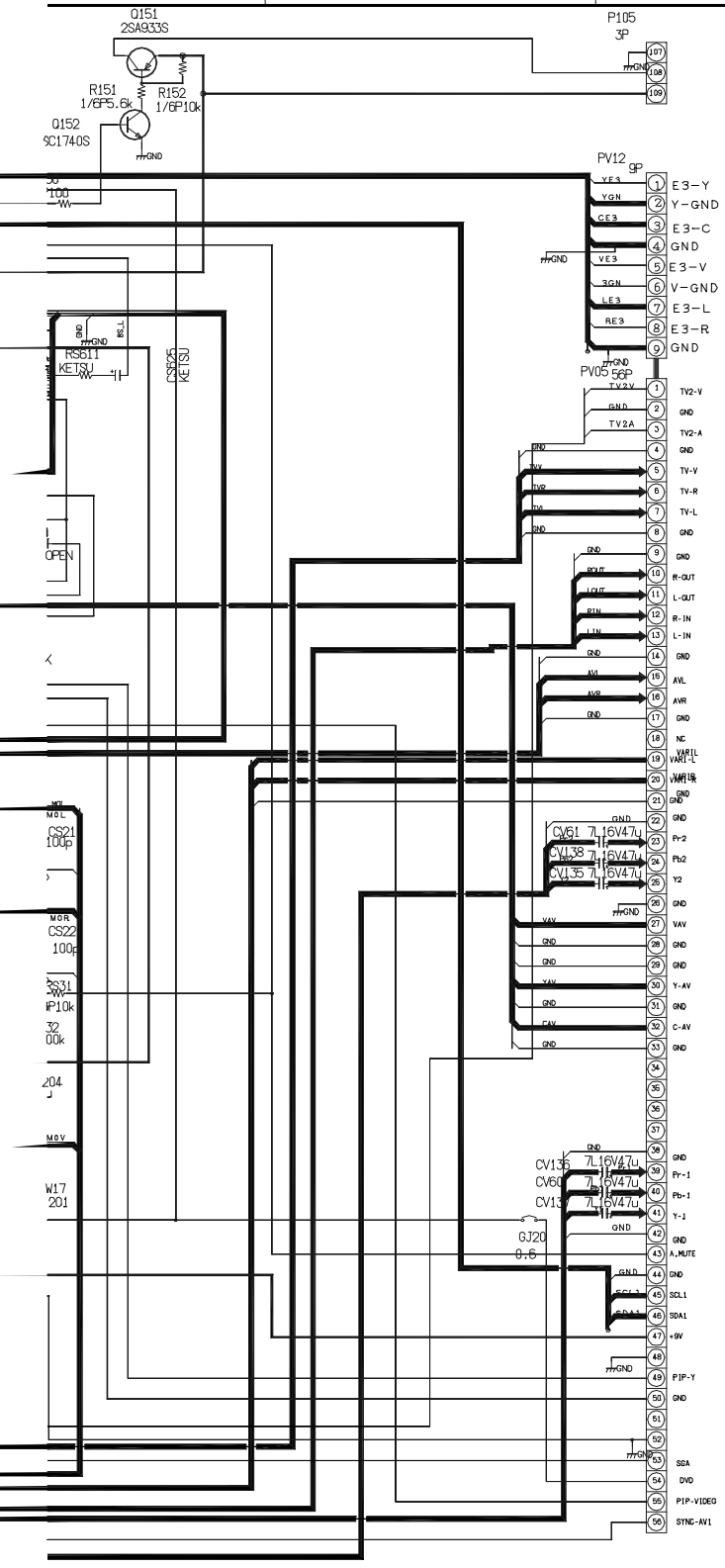

AV

50H81series

CRT-D/R
PD0080-1

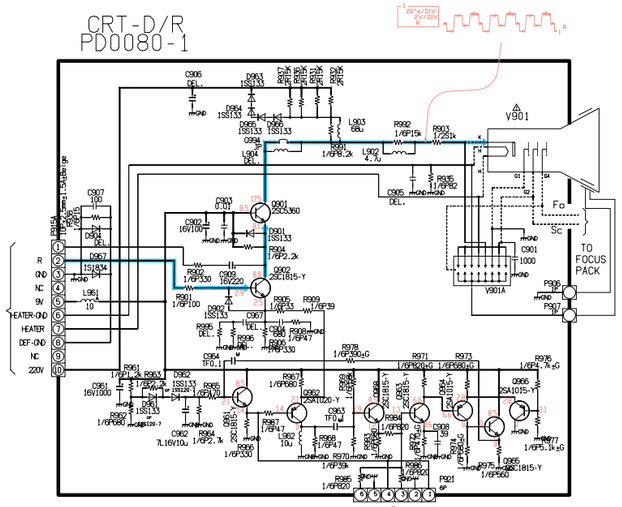

CRT-D/G
PD0080-2

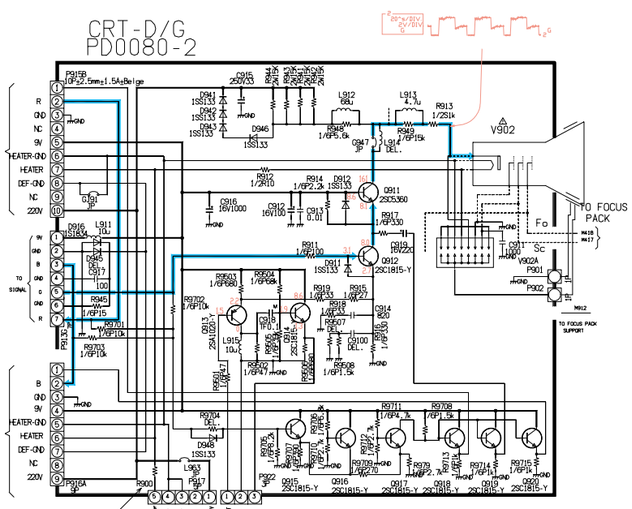

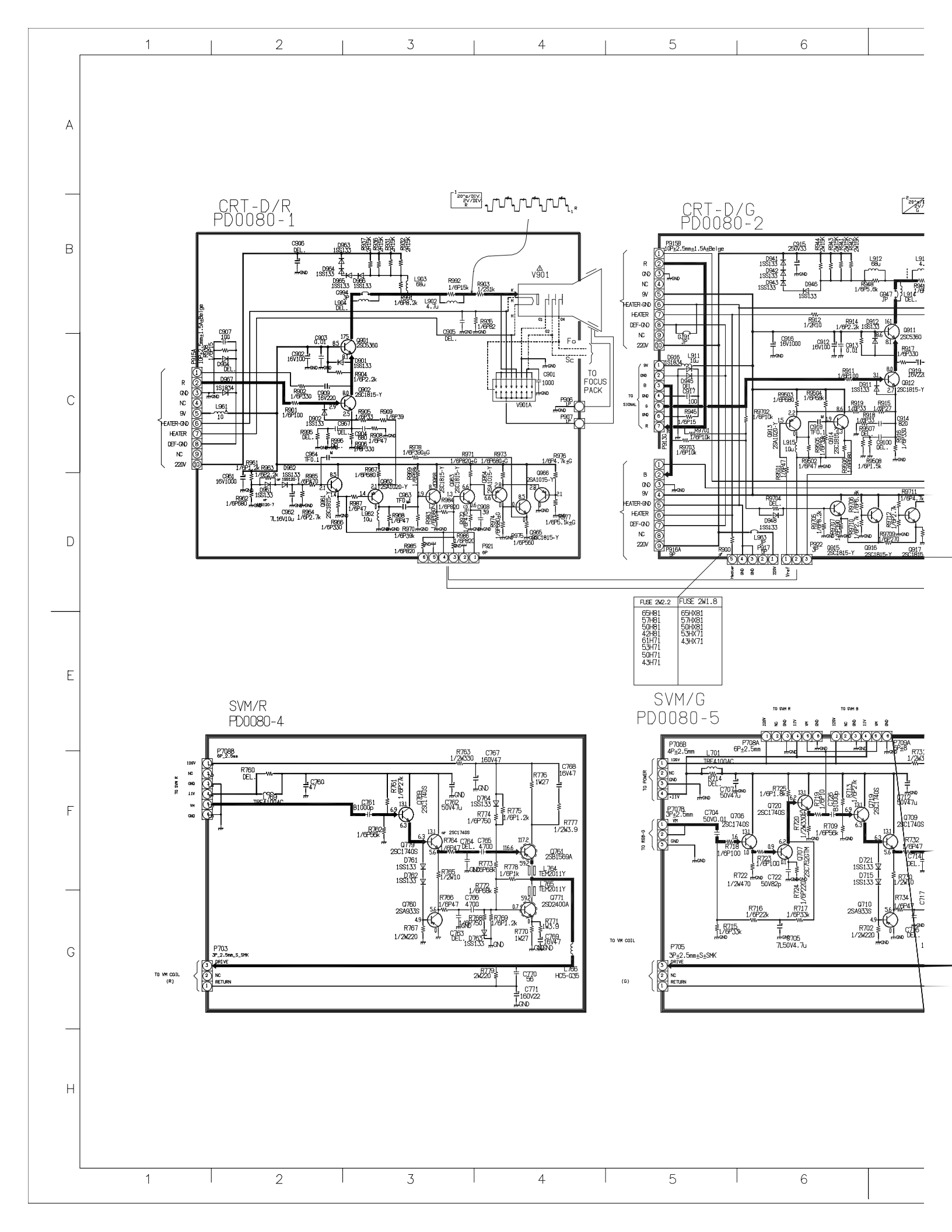
CRT-D/R
PD0080-1
CRT-D/G
PD0080-2
SVM/R
PD0080-4
SVM/G
PD0080-5
TO FOCUS PACK
FUSE 2W2.2
65H81
57H81
50H81
42H81
61H71
53H71
50H71
43H71
FUSE 2W1.8
65HX81
57HX81
50HX81
53HX71
43HX71

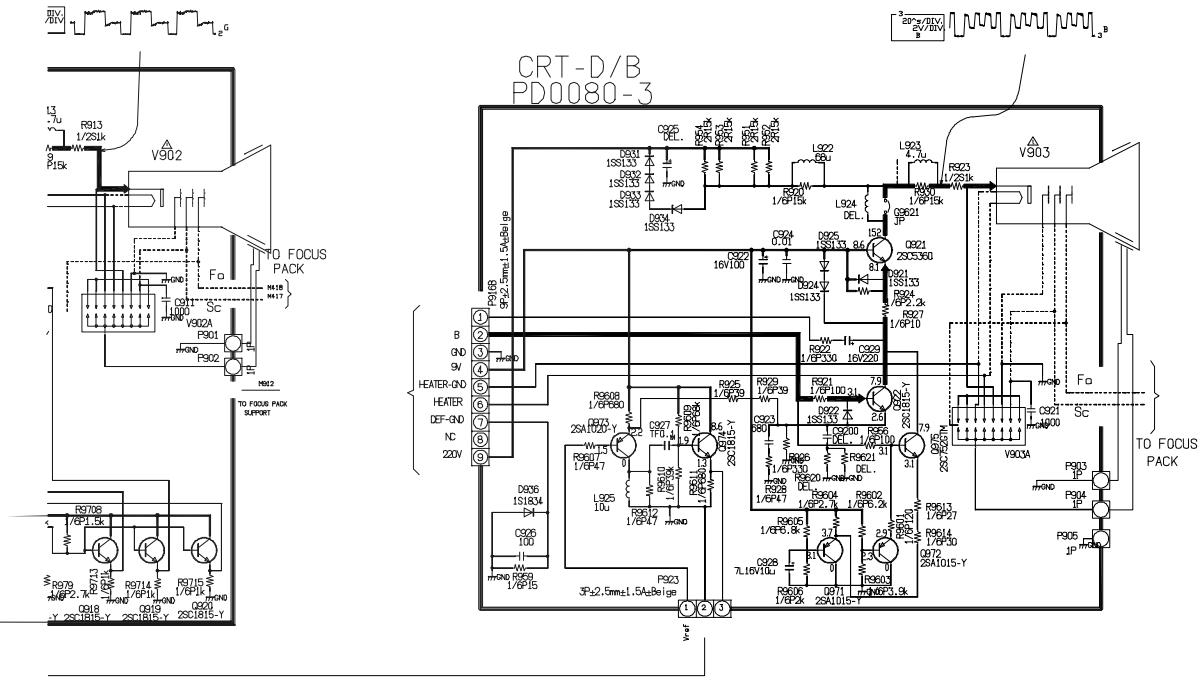

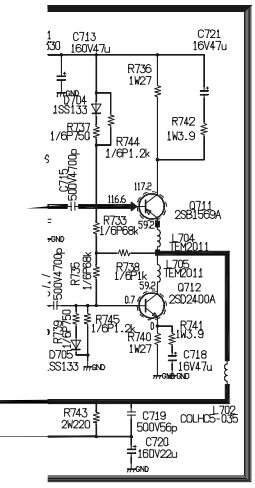

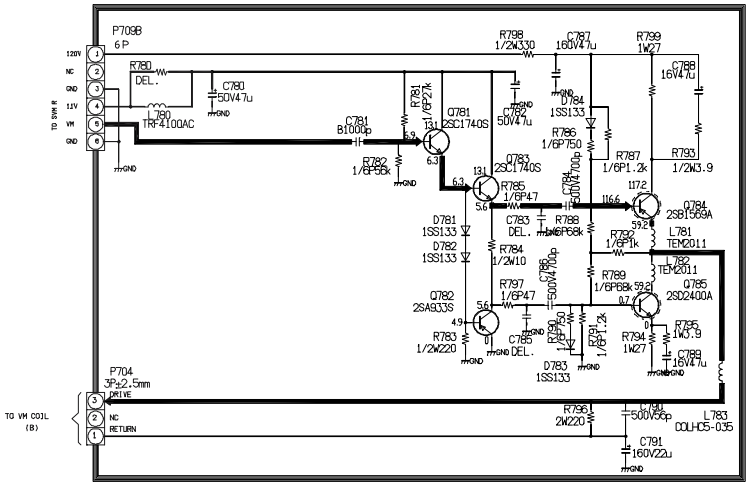

CRT/SVM
50H81 series

E043Z
REMOTE

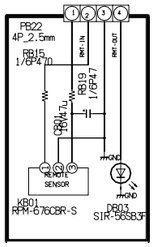

E041Z
FRONT-CONTROL

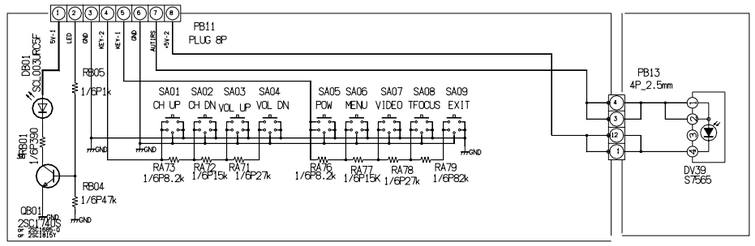

E044Z
ALS
(Ambient Light Sensor)

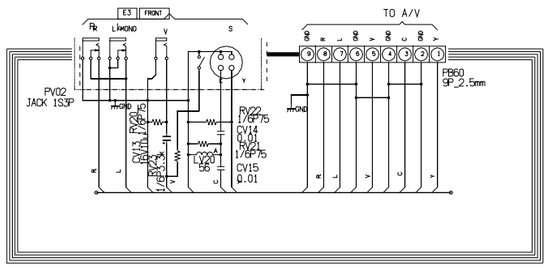

E042Z
FRONT-IN

MODEL / PCB NAME	50H71	43H71 43HX71 53H71 53HX71 61H71	42H81 50H81 57H81 65H81	50HX81 57HX81 65HX81
FRONT-CONTROL	Use	Use	Use	Use
FRONT-IN	Use	Use	Use	Use
REMOTE	Use	Use	Use	Use
ALS	No use	No use	Use	Use

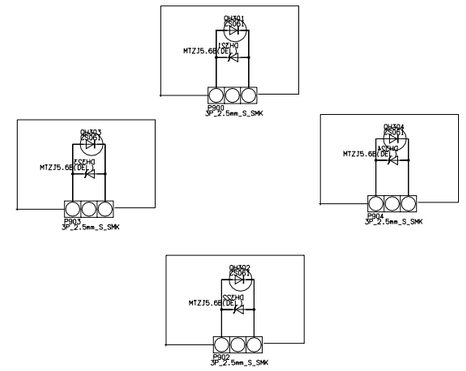

No use 50H71

FRONT
ALS-SENSOR
50H81 serise

E043Z
REMOTE

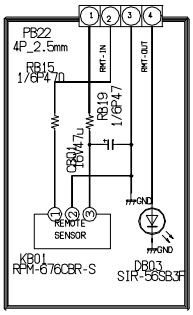

E041Z
FRONT-CONTROL

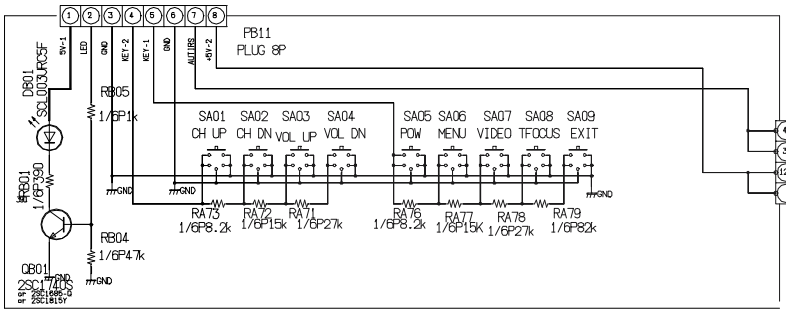

E044Z
ALS
(Ambient Light S

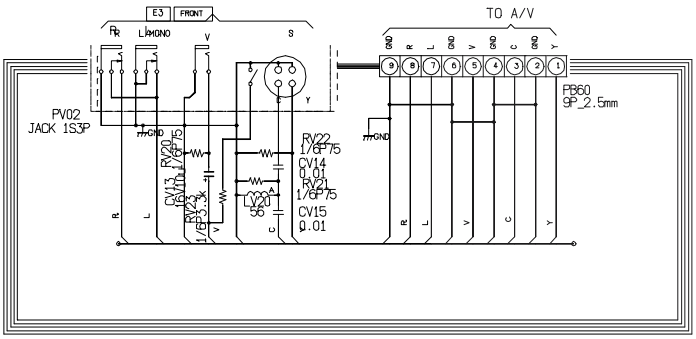

E042Z
FRONT-IN

MODEL / PCB NAME	50H71	43H71 43HX7 53H71 53HX7 61H71
FRONT-CONTROL	Use	Use
FRONT-IN	Use	Use
REMOTE	Use	Use
ALS	No use	No use

Sensor)

	42H81 50H81 57H81 65H81	50HX81 57HX81 65HX81
	Use	Use
	Use	Use
	Use	Use
	Use	Use

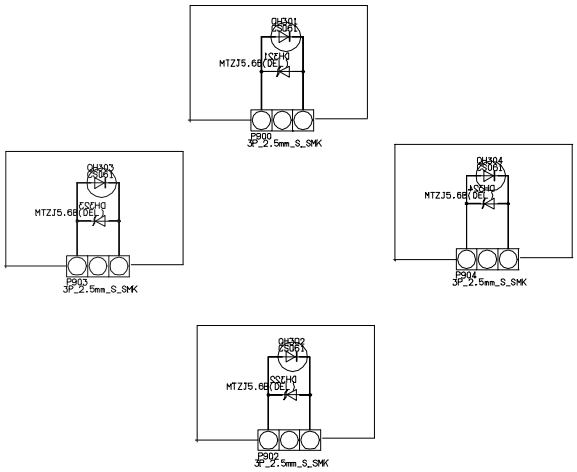

No use 50H71

FRONT
ALS-SENSOR
50H81 serise

AREA 1

ITEM / MODEL	QH173	QH174	CH244 RH205 RH206	AREA 1 & AREA 2
42H81/50H81 50HX81/57H81 57HX81/65H81 65HX81	16k	No use	No use	Use
43H71/43HX71 53H71/53HX71 61H71	16k	16k	Use	Use
50H71	16k	No use	No use	No use

AREA 2

PD0073(SIGNAL/CONVER)

DIGITAL CONVER (1/2)
50H81 serise

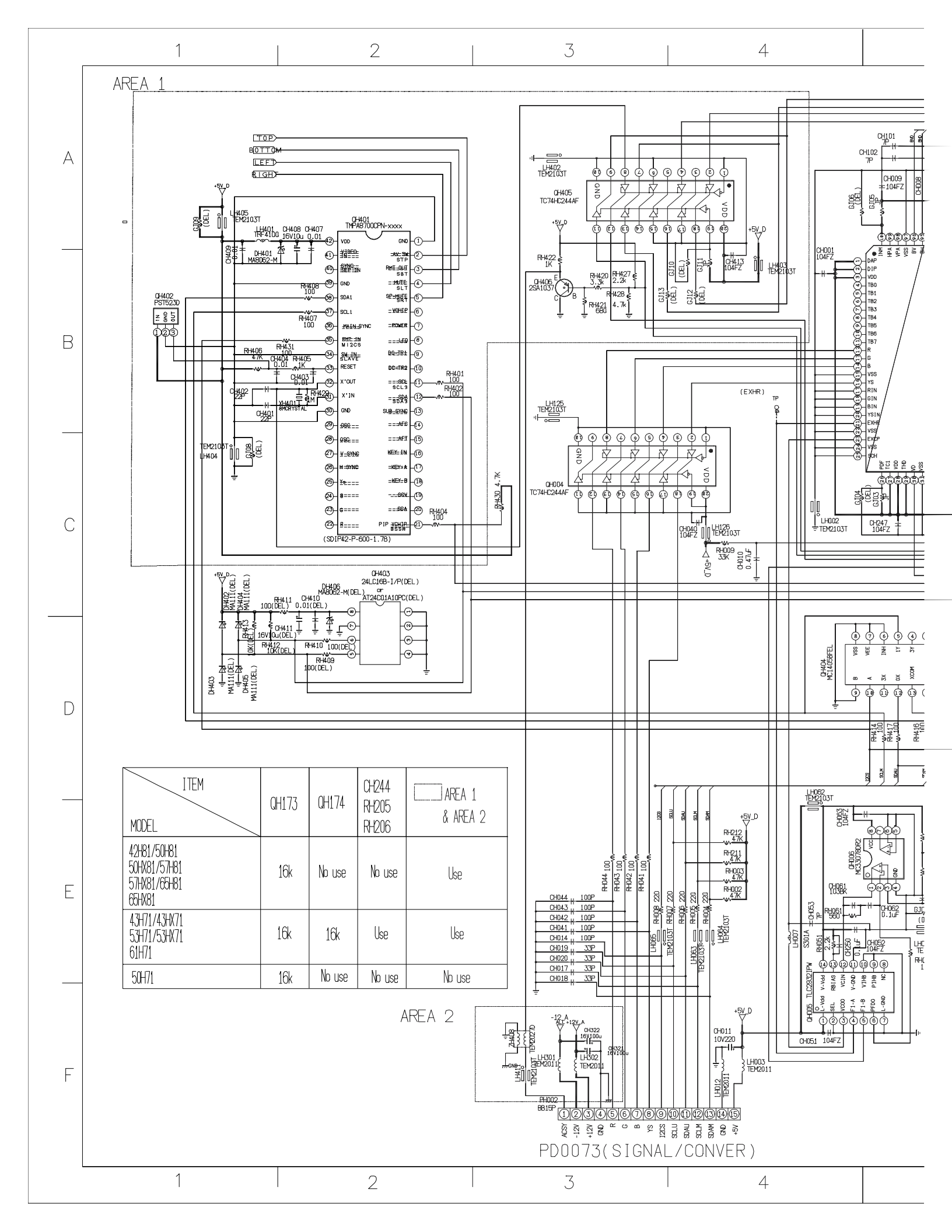
AREA 1
AREA 2
TOP
BOTTOM
LEFT
RIGHT
CH401
TMPA8700CPN-xxxx
(SDIP42-P-600-1.78)
CH403
24LC16B-I/P(DEL)
or
AT24C01A10PC(DEL)
(EXHR)
PD0073(SIGNAL/CONVER)
ITEM
MODEL
QH173
QH174
CH244
RH205
RH206
AREA 1
& AREA 2
42H81/50H81
50HX81/57H81
57HX81/65H81
65HX81
16k
No use
Use
43H71/43HX71
53H71/53HX71
61H71
16k
16k
Use
Use
50H71
16k
No use
No use
No use

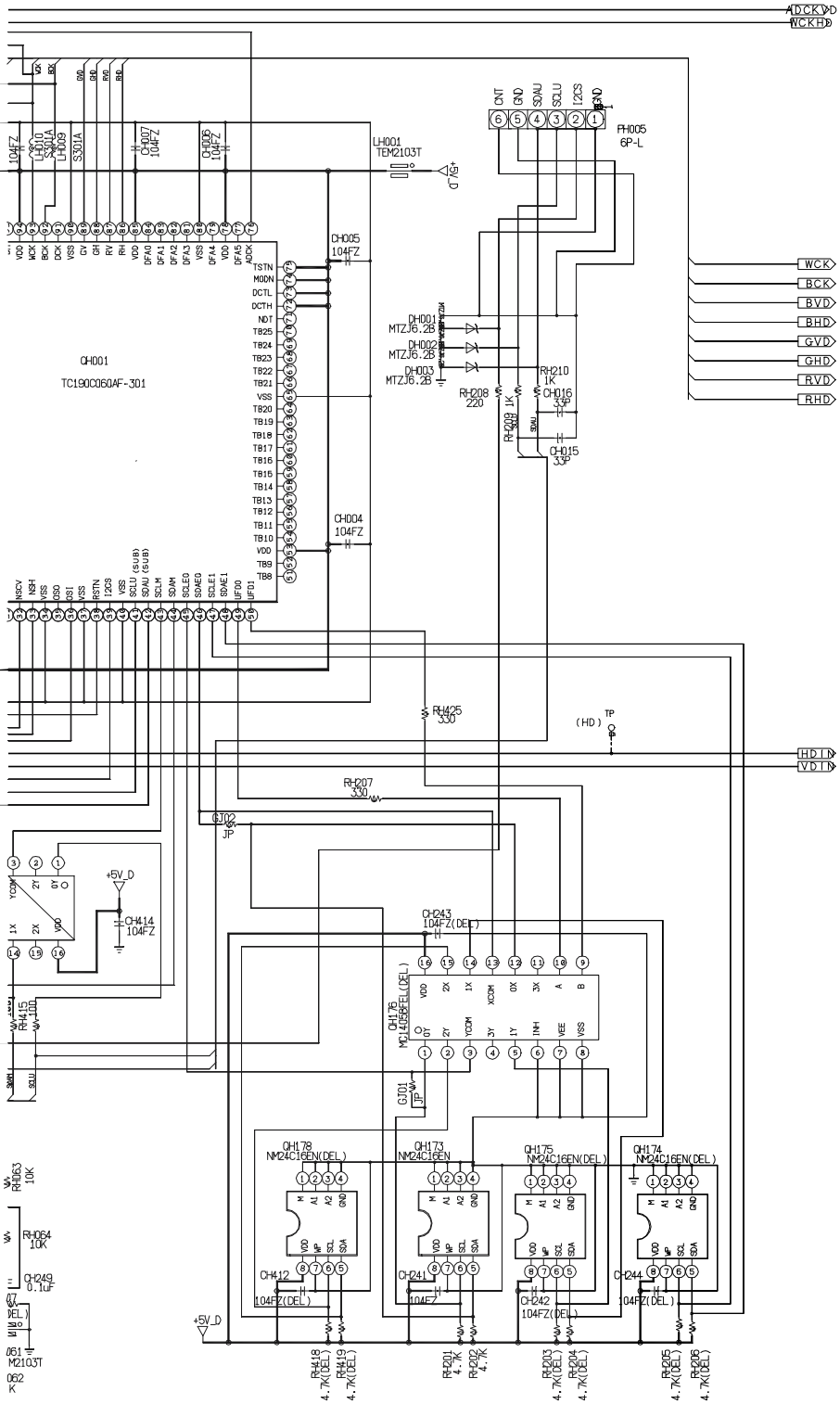

DIGITAL CONVER (1/2)

50H81 serise

AREA 3

PD0079(TOUCH FOCUS SENSOR)

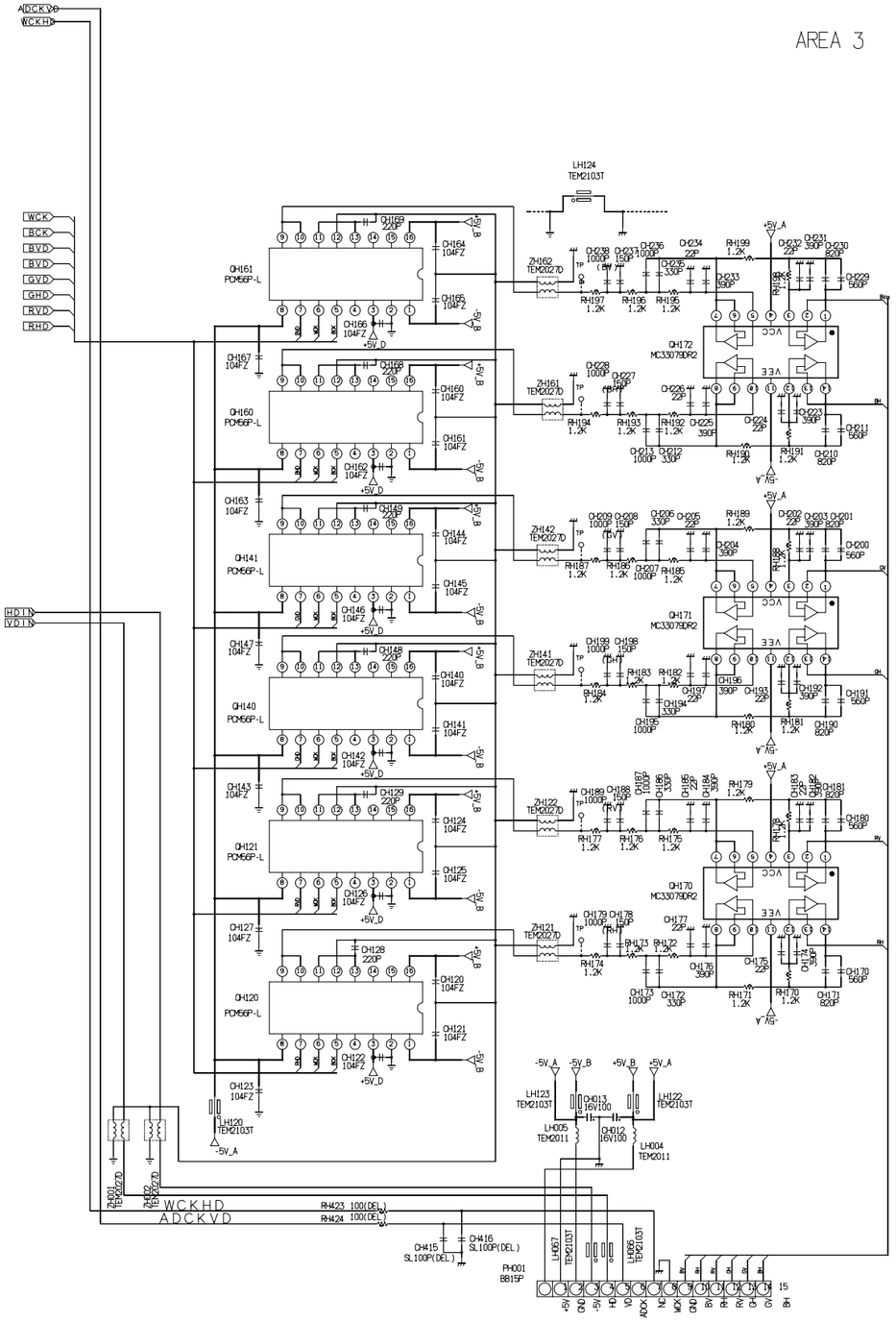

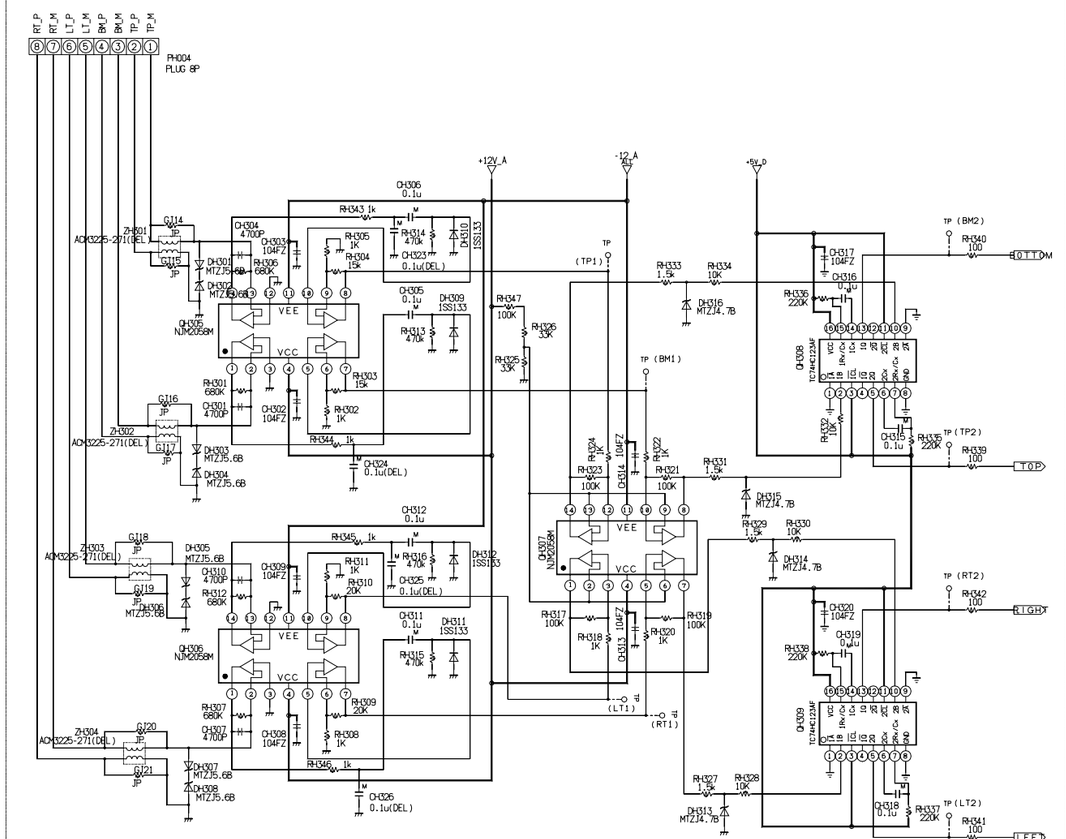

ITEM / MODEL	AREA 3
42H81/50H81/ 50HV81/57H81 57HV81/65H81/ 65HV81	Use
43H71/43HX71/ 53H71/53HX71 61H71	Use
50H71	No use

PD0073(SIGNAL/CONVER)

DIGITAL CONVER (2/2)

50H81 serise

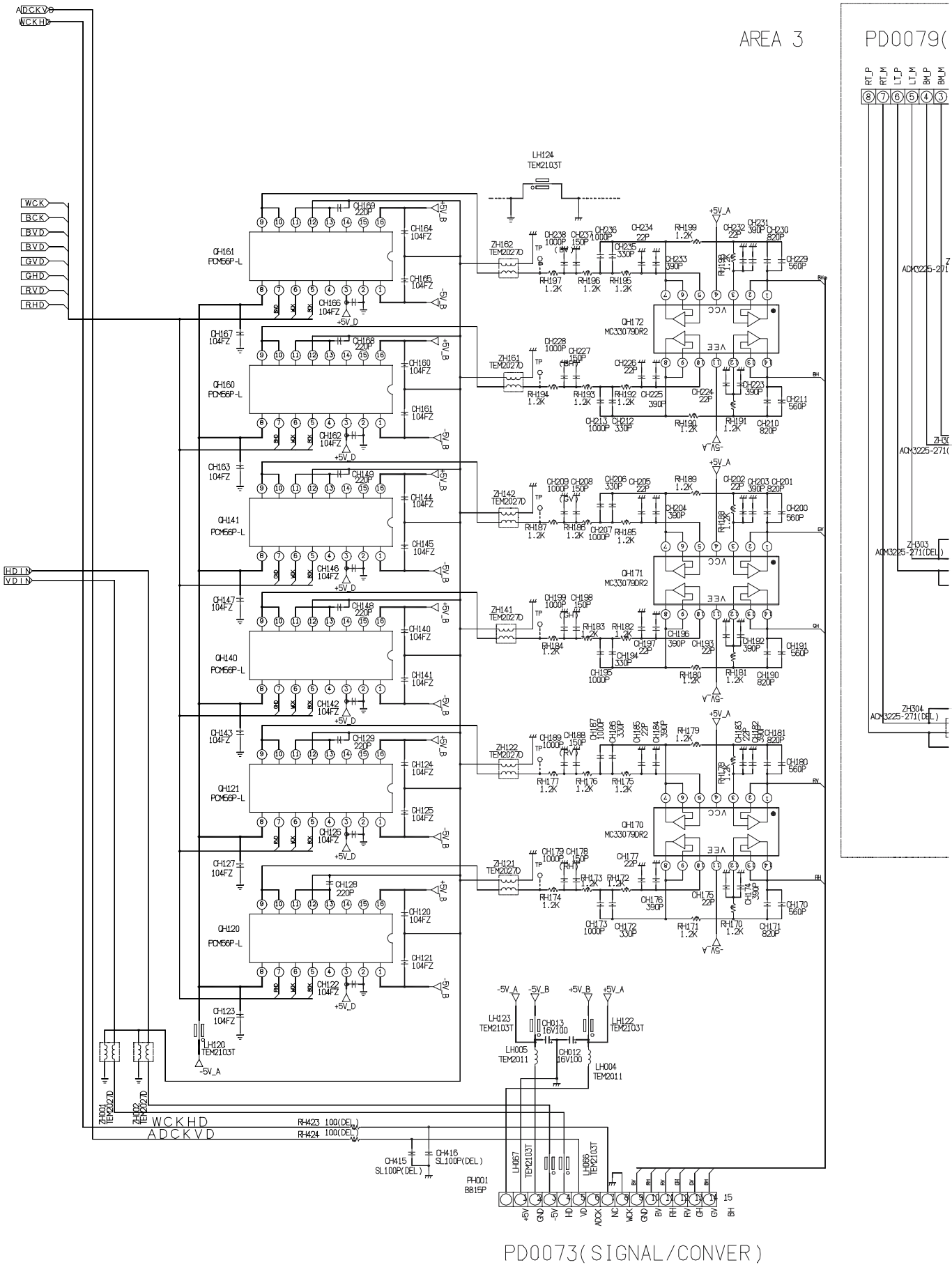
AREA 3
PD0079(
ADCKVD
WCKHD
WCK
BCK
BVD
BVD
GVD
GHD
RVD
RHD
HDIN
VDIN
CH161 PCM56P-L
CH160 PCM56P-L
CH141 PCM56P-L
CH140 PCM56P-L
CH121 PCM56P-L
CH120 PCM56P-L
LH124 TEM2103T
LH123 TEM2103T
LH122 TEM2103T
LH120 TEM2103T
LH005 TEM2011
LH004 TEM2011
CH013 16V100
CH012 16V100
ZH001 TEM2027D
ZH002 TEM2027D
ZH142 TEM2027D
ZH141 TEM2027D
ZH122 TEM2027D
ZH121 TEM2027D
CH172 MC33079DR2
CH171 MC33079DR2
CH170 MC33079DR2
RH423 100(DEL)
RH424 100(DEL)
CH415 SL100P(DEL)
CH416 SL100P(DEL)
PH001 BB15P
LH067 TEM2103T
LH066 TEM2103T
+5V_A
-5V_A
+5V_D
-5V_D
+5V_B
-5V_B
PD0073(SIGNAL/CONVER)

TOUCH FOCUS SENSOR)

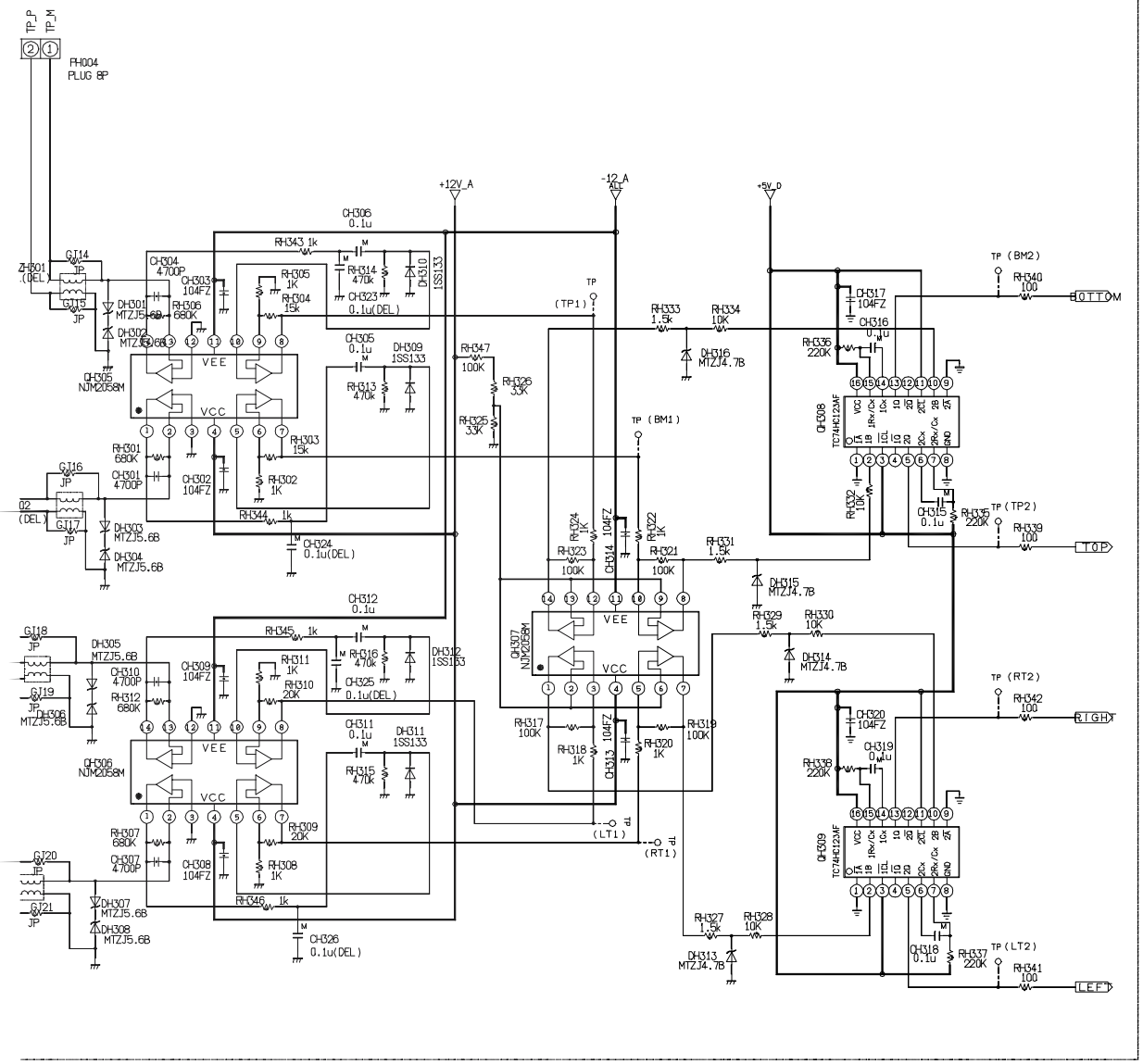

ITEM / MODEL	AREA 3
42H81/50H81/ 50HX81/57H81 57HX81/65H81/ 65HX81	Use
43H71/43HX71/ 53H71/53HX71 61H71	Use
50H71	No use

DIGITAL CONVER (2/2)
50H81 serise

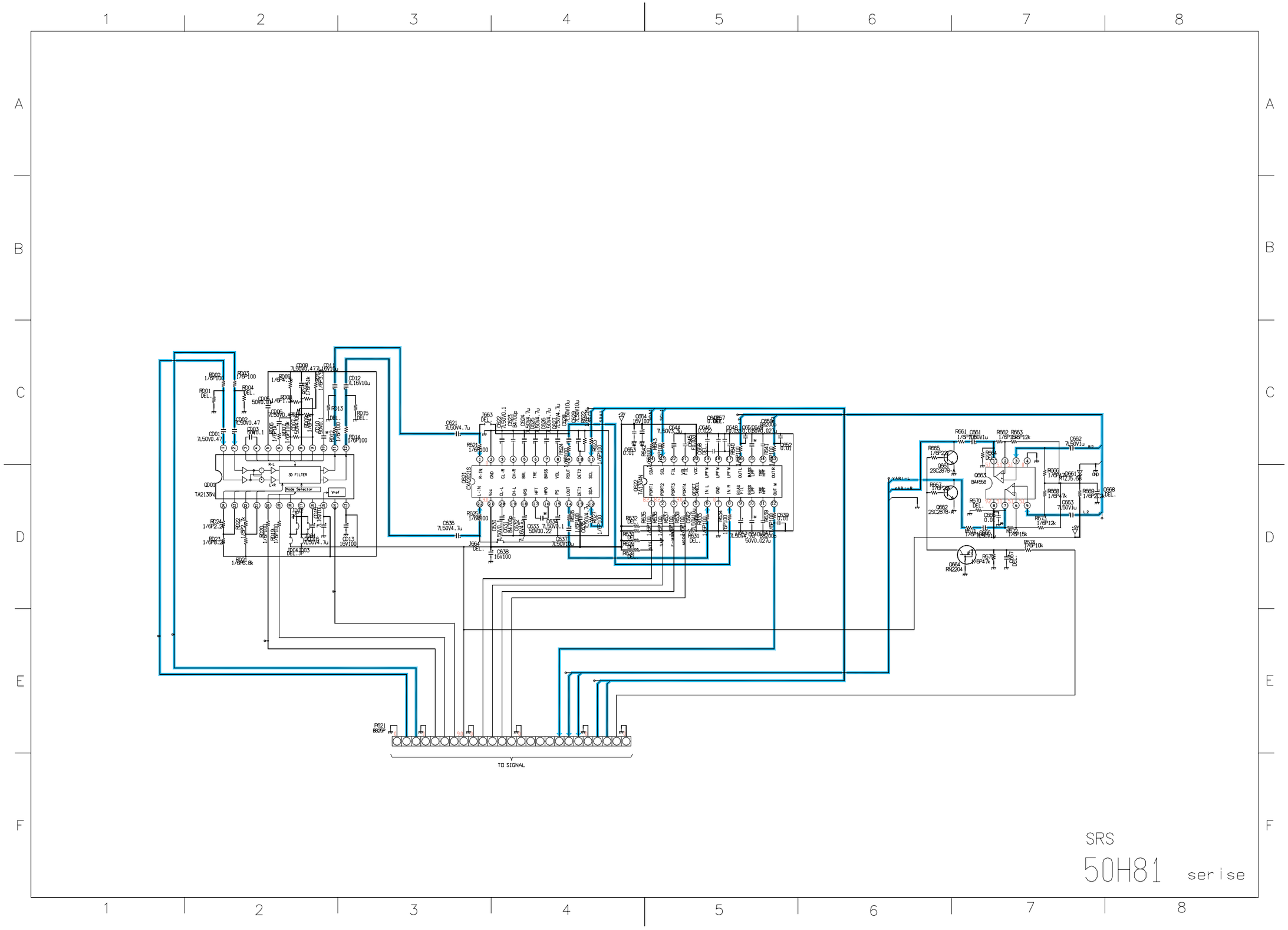

TO SIGNAL
SRS
50H81 serise

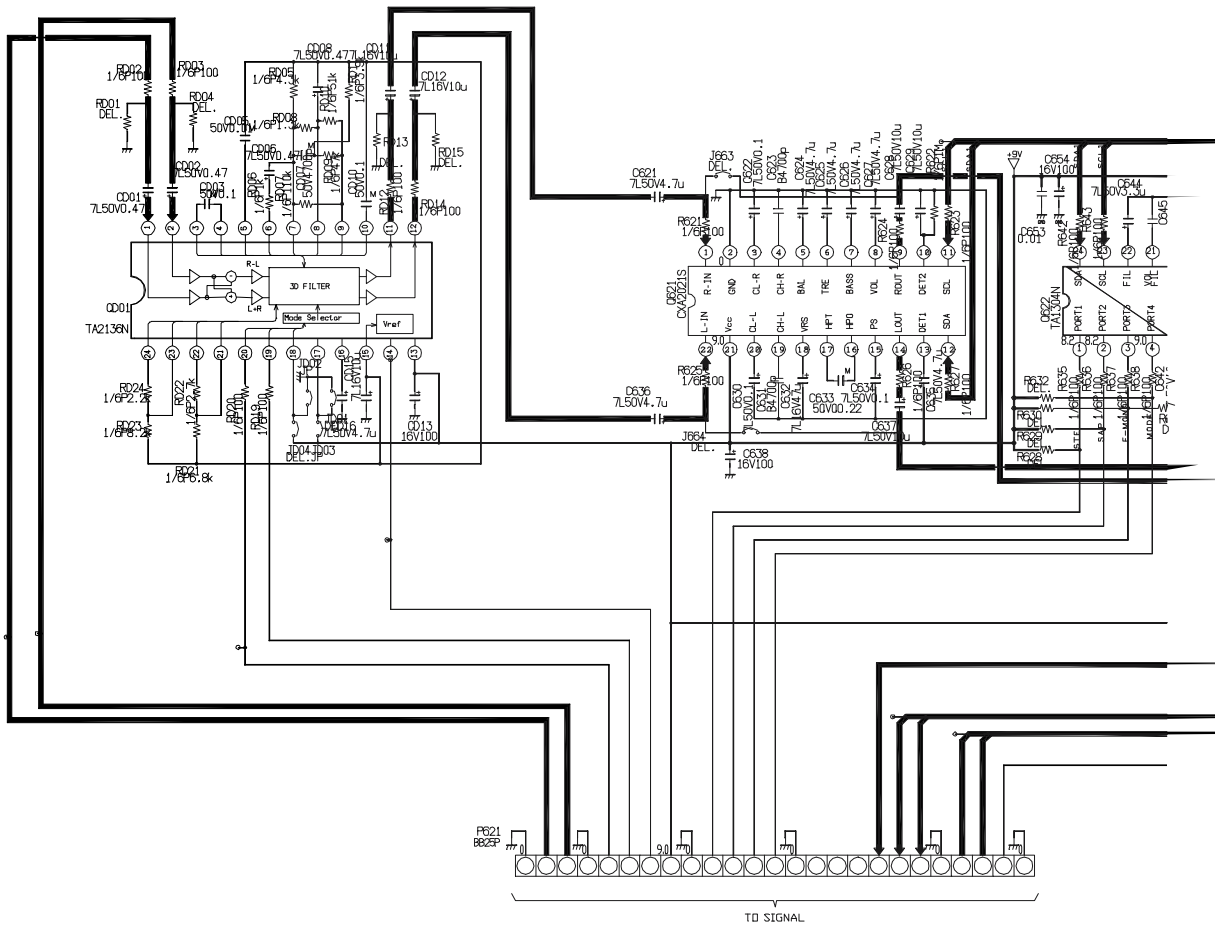
3D FILTER
Mode Selector
Vref
TA2136N
CXA2021S
TA1304N
P621
BB25P
TO SIGNAL

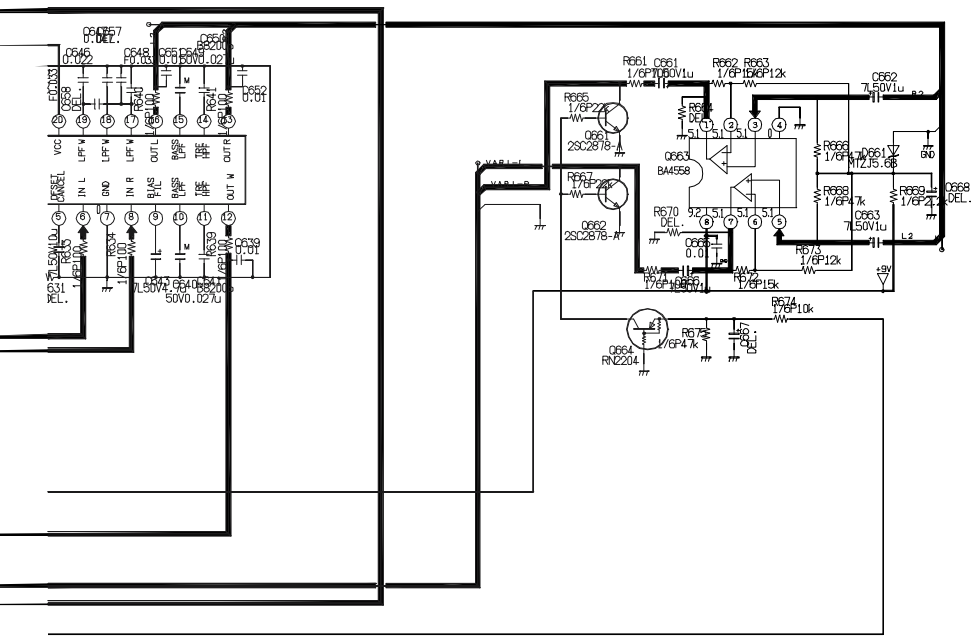

SRS

50H81 serise

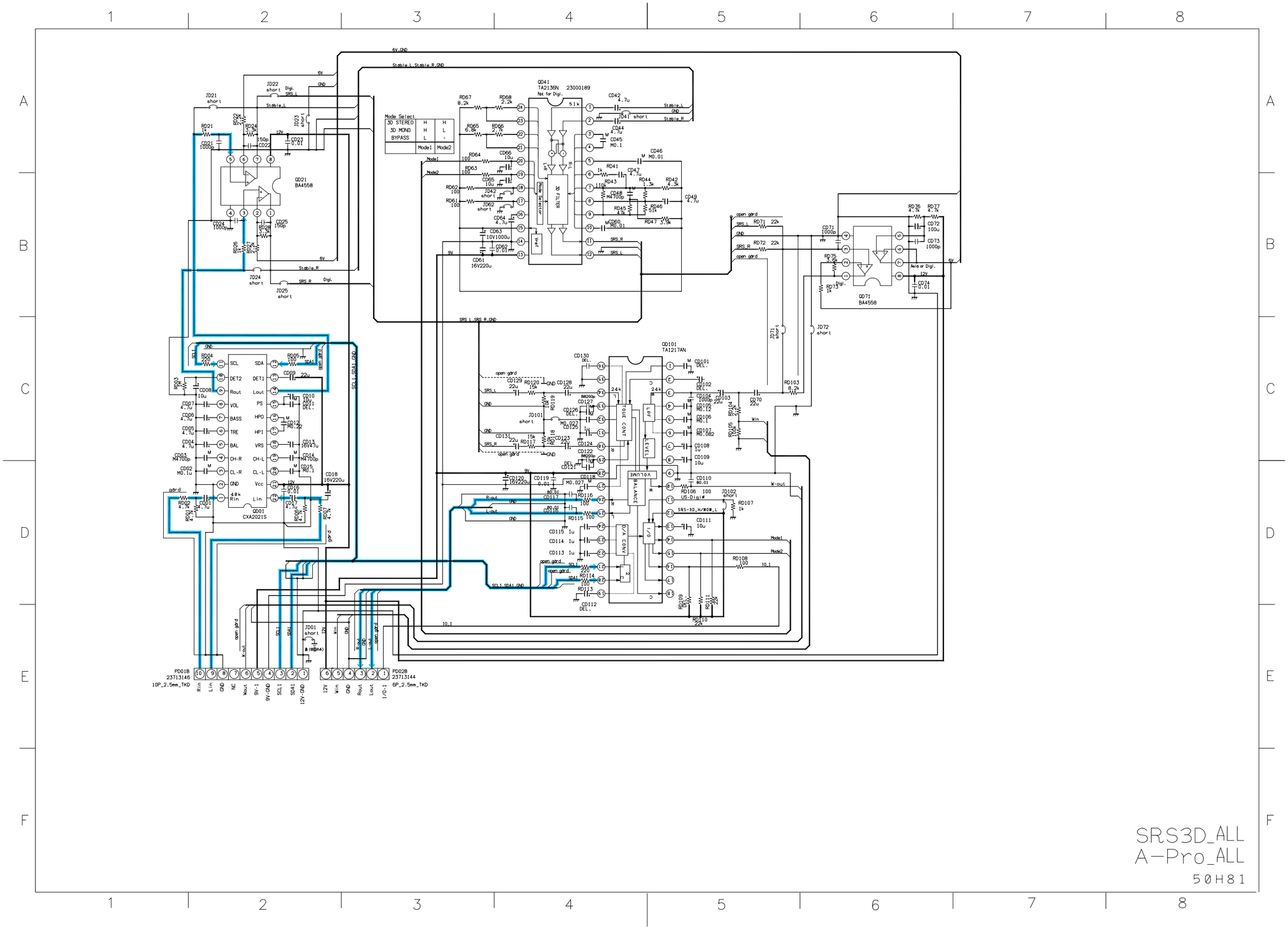
6V_GND
Stable_L_Stable_R_GND
SRS_L_SRS_R_GND
SCL1_SDA1_GND
QD41 TA2136N 23000189
Not for Digi.
Mode Select
3D STEREO H H
3D MONO H L
BYPASS L -
Mode1 Mode2
QD21 BA4558
QD71 BA4558
QD101 TA1217AN
QD01 CXA2021S
PD01B 23713146 10P_2.5mm_TKD
PD02B 23713144 6P_2.5mm_TKD
SRS3D_ALL
A-Pro_ALL
50H81

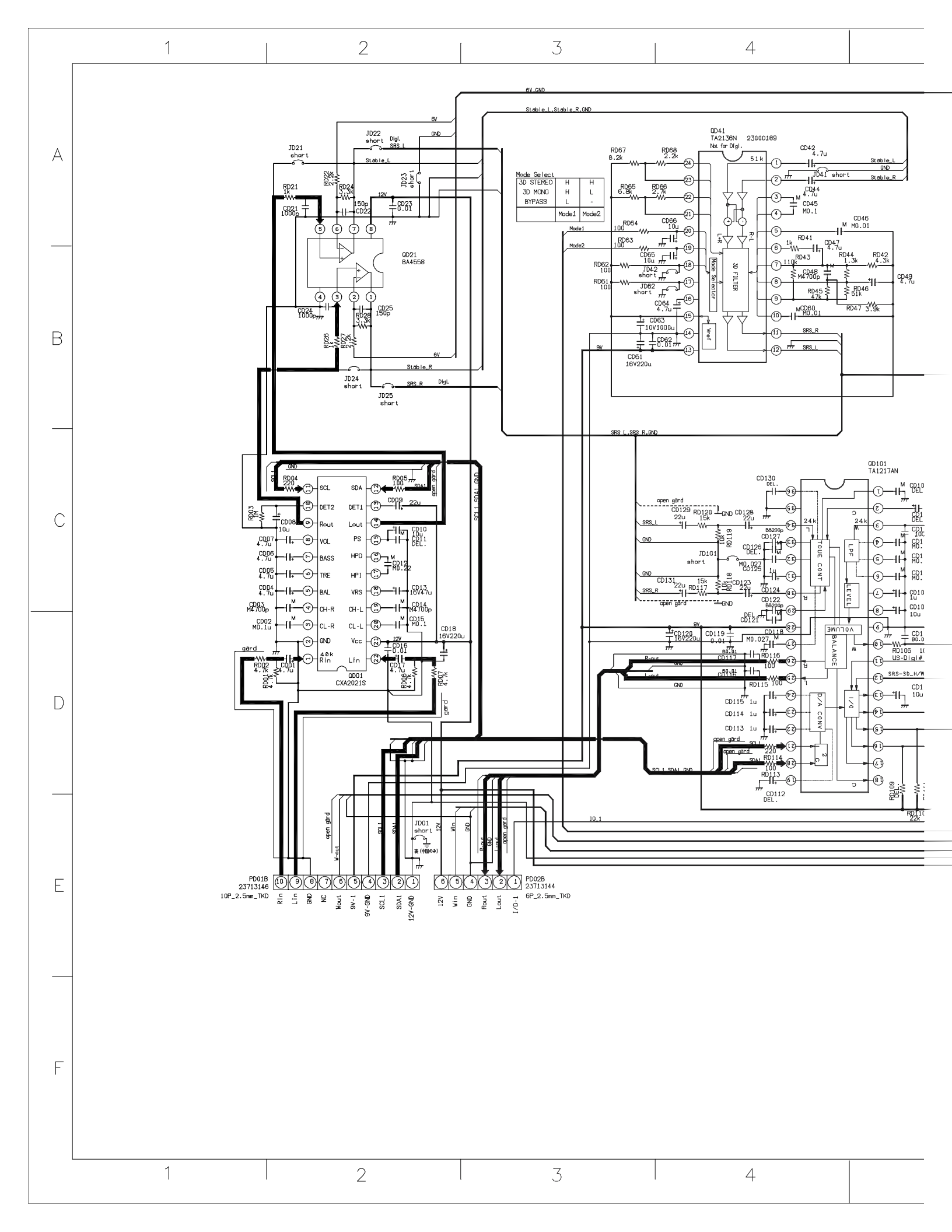
6V,GND
Stable_L,Stable_R,GND
SRS_L,SRS_R,GND
SCL1,SDA1,GND
10_1
QD41
TA2136N
Not for Digl.
23000189
Mode Select
3D STEREO H H
3D MONO H L
BYPASS L -
Mode1 Mode2
3D FILTER
Mode Selector
Vref
QD21
BA4558
QD101
TA1217AN
QD01
CXA2021S
SCL
SDA
DET2
DET1
Rout
Lout
VOL
PS
BASS
HPD
TRE
HPI
BAL
VRS
CH-R
CH-L
CL-R
CL-L
GND
Vcc
Rin
Lin
TONE CONT
LPF
LEVEL
VOLUME
BALANCE
D/A CONV
I/O
I2C
JD21 short
JD22 short
JD23 short
JD24 short
JD25 short
JD041 short
JD042 short
JD062 short
JD101 short
JD01 short
PD01B
23713146
10P_2.5mm_TKD
Rin
Lin
GND
NC
Wout
9V-1
9V-GND
SCL1
SDA1
12V-GND
PD02B
23713144
6P_2.5mm_TKD
12V
Win
GND
Rout
Lout
I/O-1

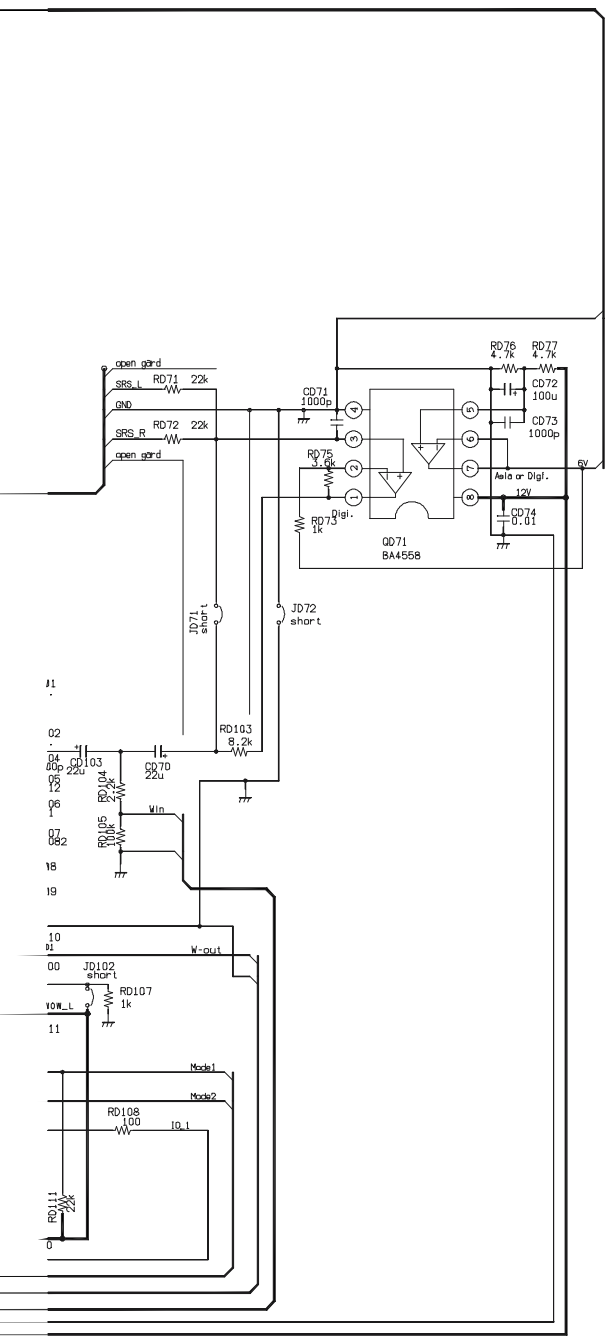

SRS3D_ALL
A-Pro_ALL
50H81

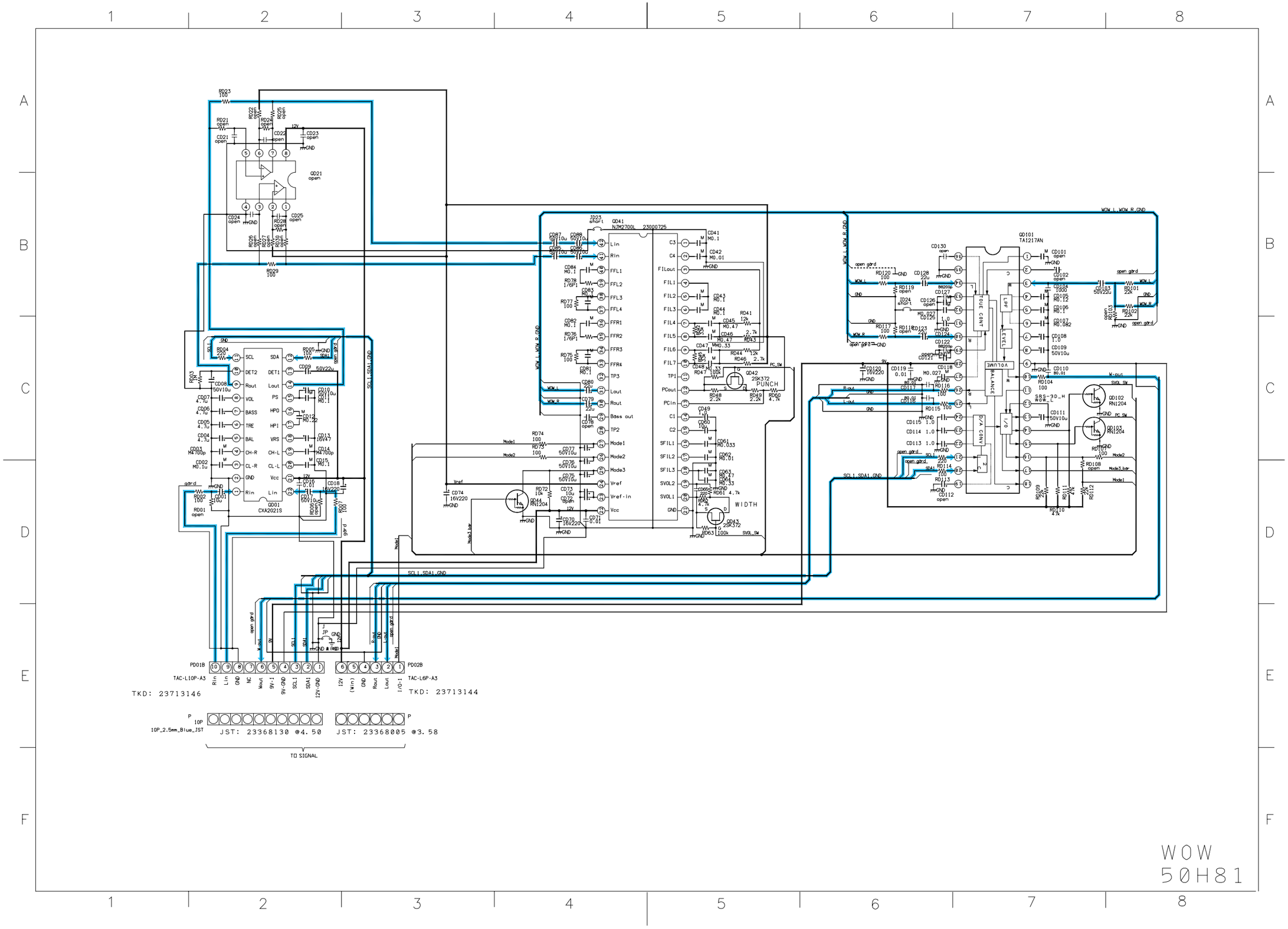

QD21
open
QD01
CXA2021S
QD41
NJM2700L 23000725
QD42
2SK372
PUNCH
WIDTH
QD101
TA1217AN
QD102
RN1204
QD103
RN1204
PD01B
TAC-L10P-A3
TKD: 23713146
PD02B
TAC-L6P-A3
TKD: 23713144
10P
10P_2.5mm_Blue_JST
JST: 23368130 @4.50
JST: 23368005 @3.58
TO SIGNAL
WOW
50H81

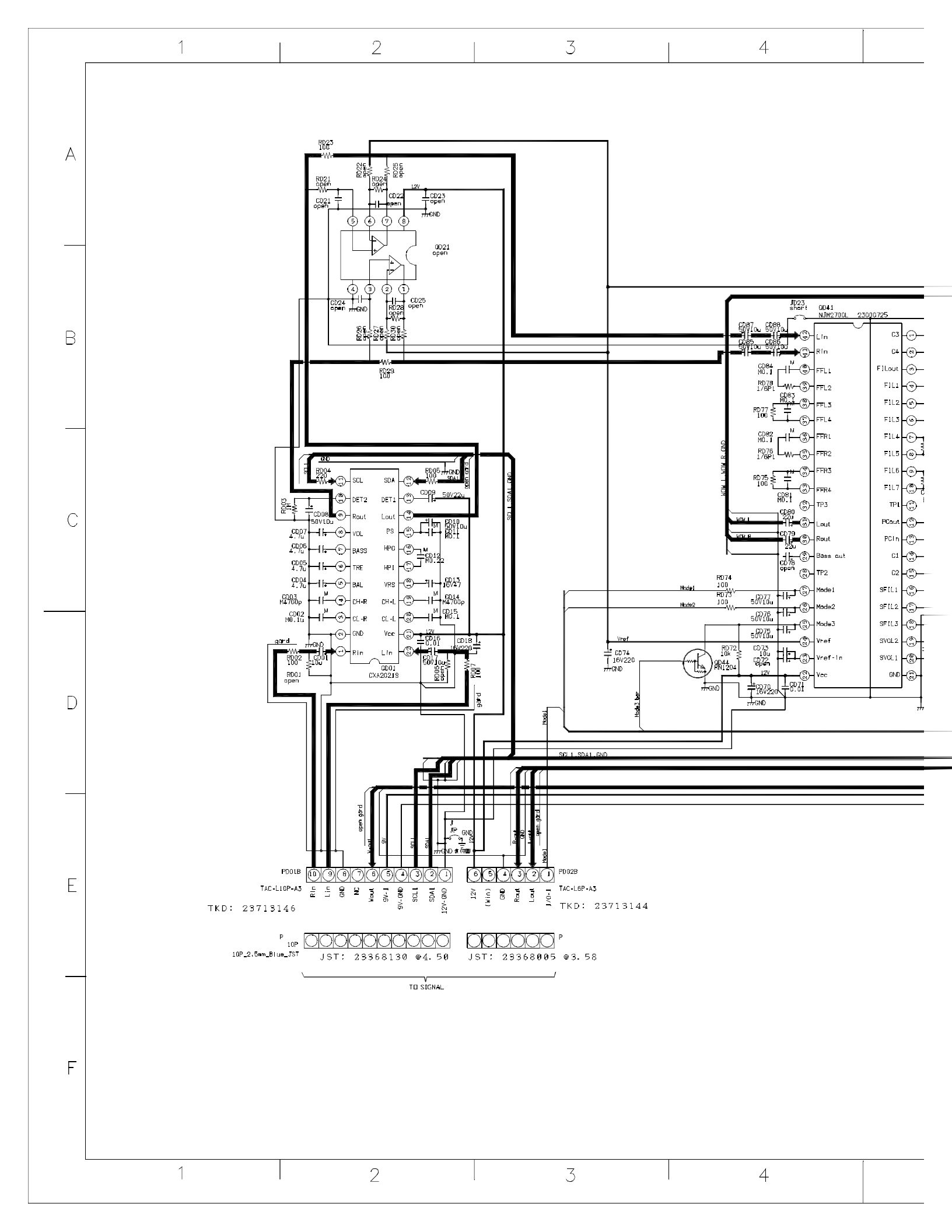

QD21 open
QD01 CXA2021S
QD41 NJM2700L 23000725
QD44 RN1204
PD01B
TAC-L10P-A3
TKD: 23713146
PD02B
TAC-L6P-A3
TKD: 23713144
10P_2.5mm_Blue_JST
JST: 23368130 @4.50
JST: 23368005 @3.58
TO SIGNAL

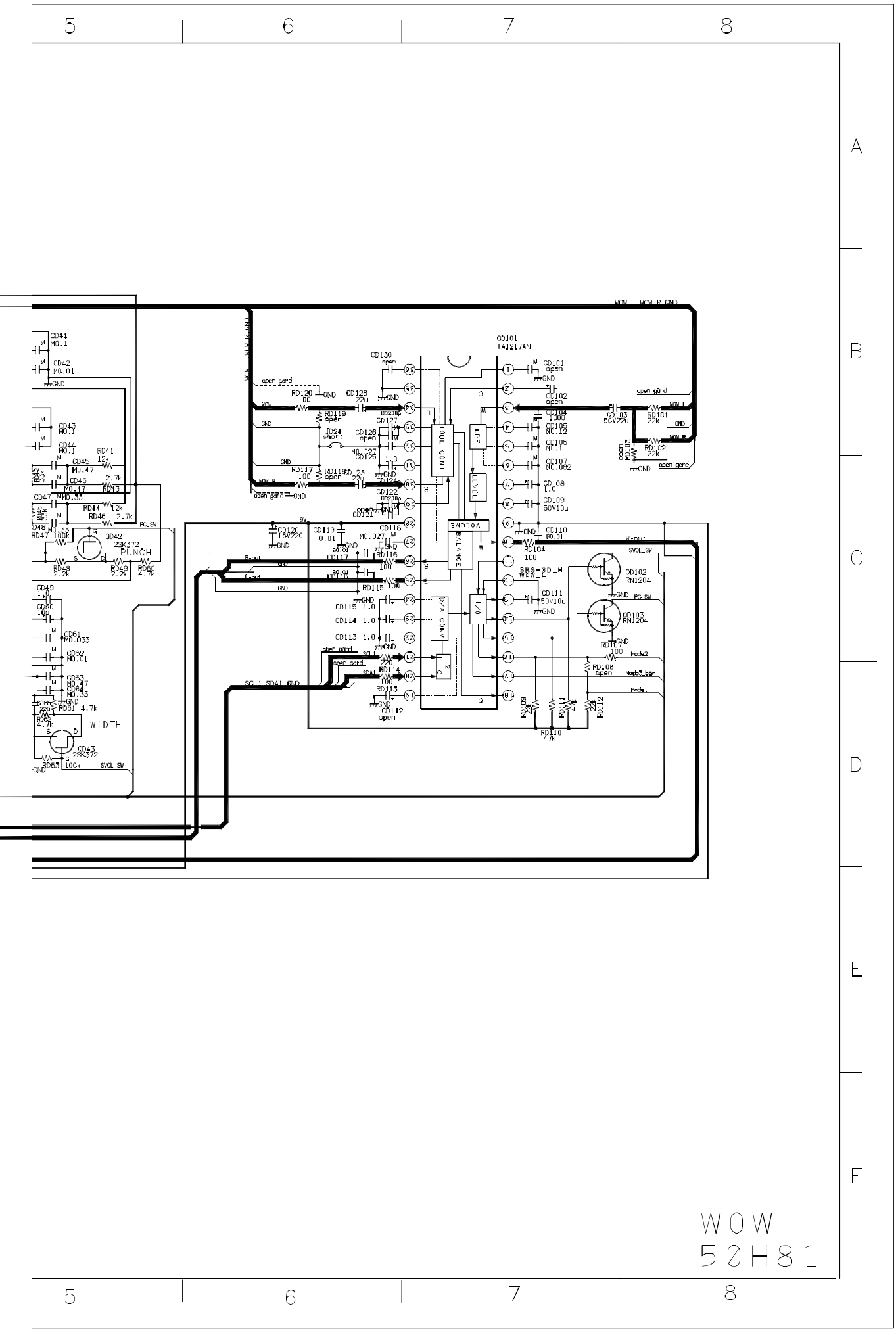

5
6
7
8
A
B
C
D
E
F
WOW
50H81
QD101
TA1217AN
QD102
RN1204
QD103
RN1204
QD42
2SK372
PUNCH
QD43
2SK372
WIDTH
TONE CONT
LPF
LEVEL
VOLUME
BALANCE
D/A CONV
I/O
SCL1 SDA1 GND
WOW_L WOW_R GND

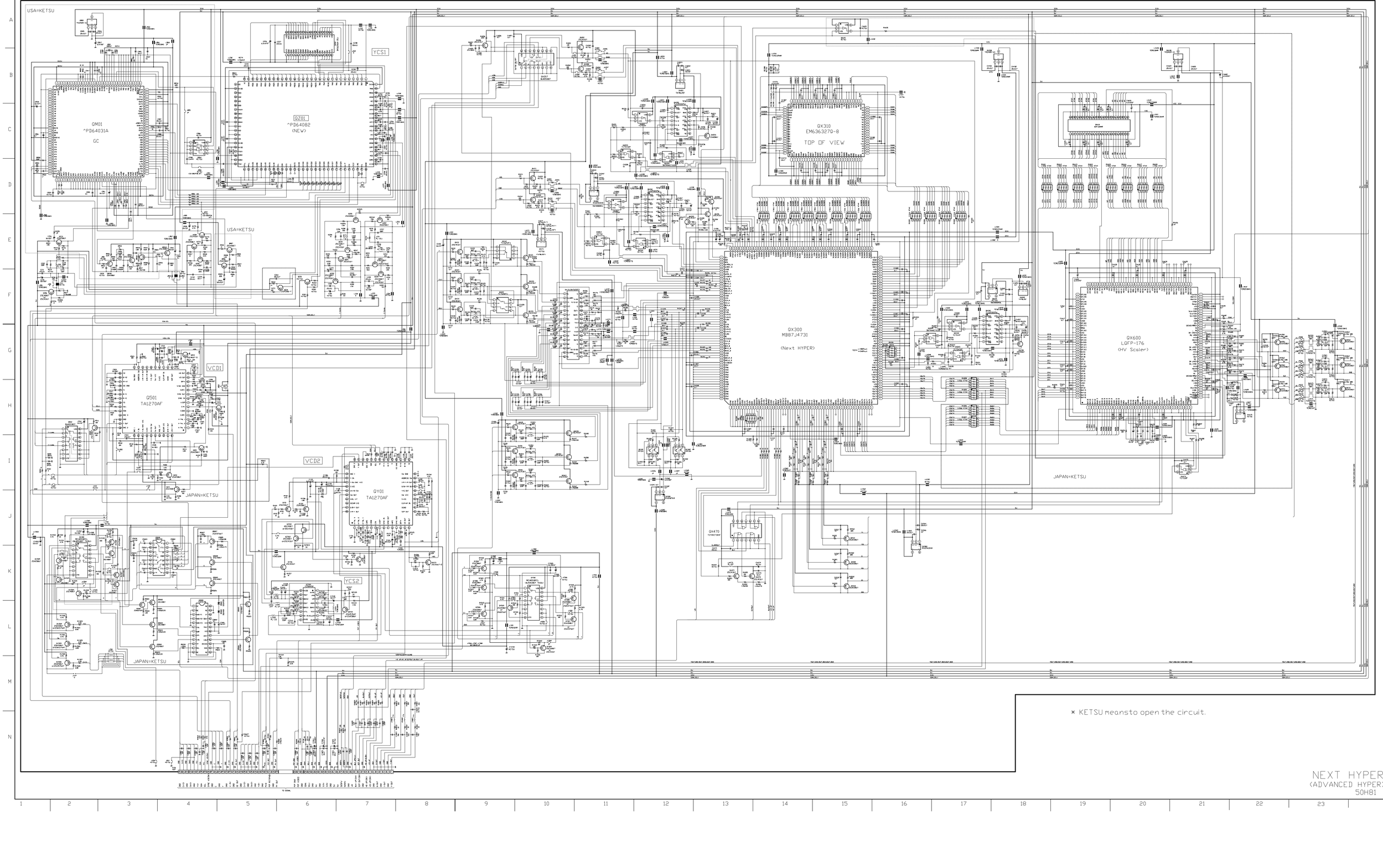
USA=KETSU
QM01
^PD64031A
GC
YCS1
QZ01
^PD64082
(NEW)
USA=KETSU
VCD1
QS01
TA1270AF
JAPAN=KETSU
VCD2
QY01
TA1270AF
YCS2
JAPAN=KETSU
QX310
EM63632270-8
TOP OF VIEW
QX300
MB87J4731
(Next HYPER)
QX470
QX600
LQFP-176
(HV Scaler)
JAPAN=KETSU
* KETSU meansto open the circuit.
NEXT HYPER
(ADVANCED HYPER)
50H81

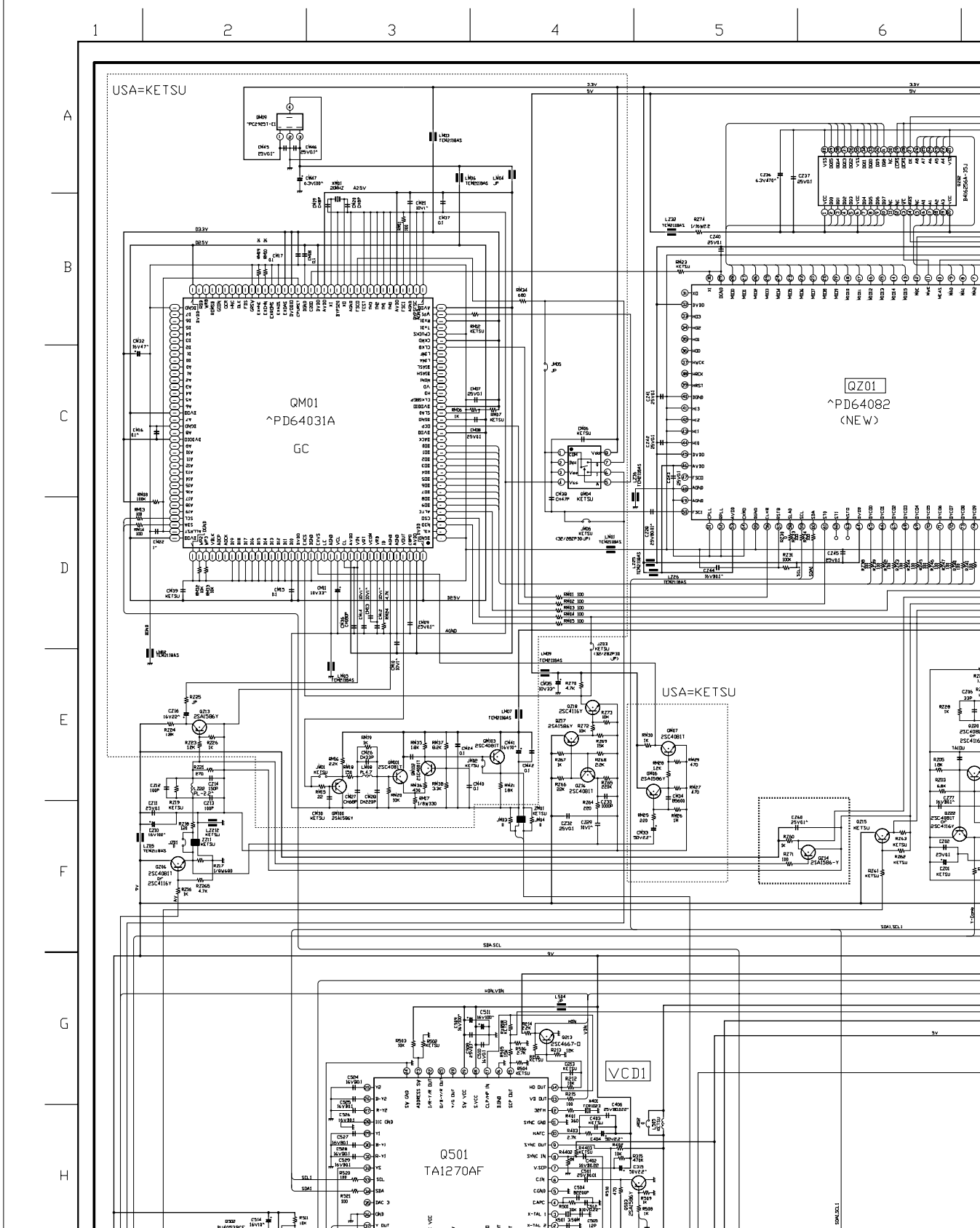
USA=KETSU
QM01
^PD64031A
GC
QZ01
^PD64082
(NEW)
USA=KETSU
VCD1
Q501
TA1270AF

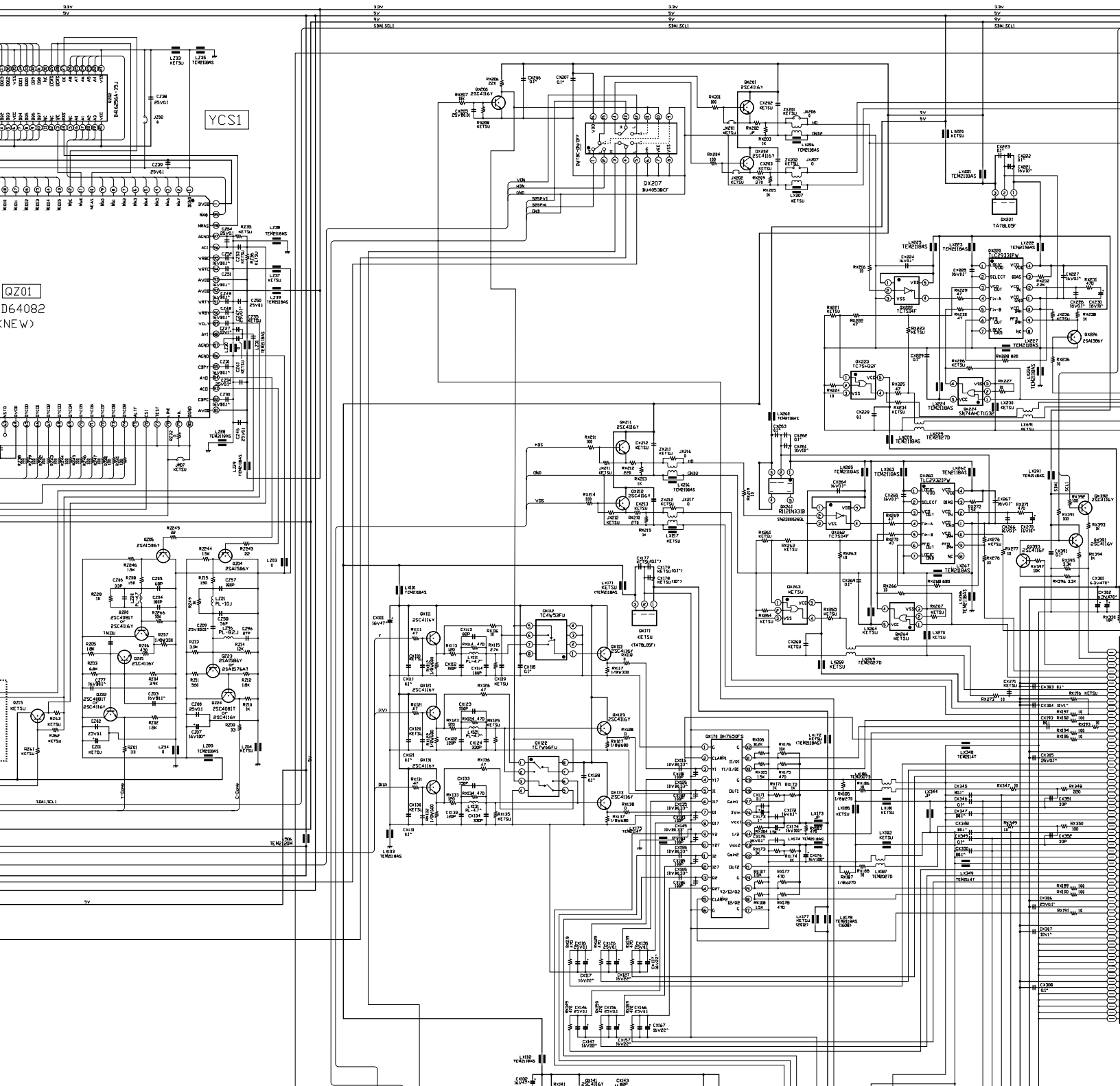
6
7
8
9
10
11
12
YCS1
QZ01
D64082
(NEW)
QX207
BU4053BCF
TA78L05F
TC7W66FU
TC4W53FU
TA78L05F
SN74AHCT132
TC7SH32F
TC7SH04F
TC7S04F
TLP2931PV
R1121N331B
SN2300260L
BH76505FS
TC4W53FU
TC7W66FU
TA78L05F

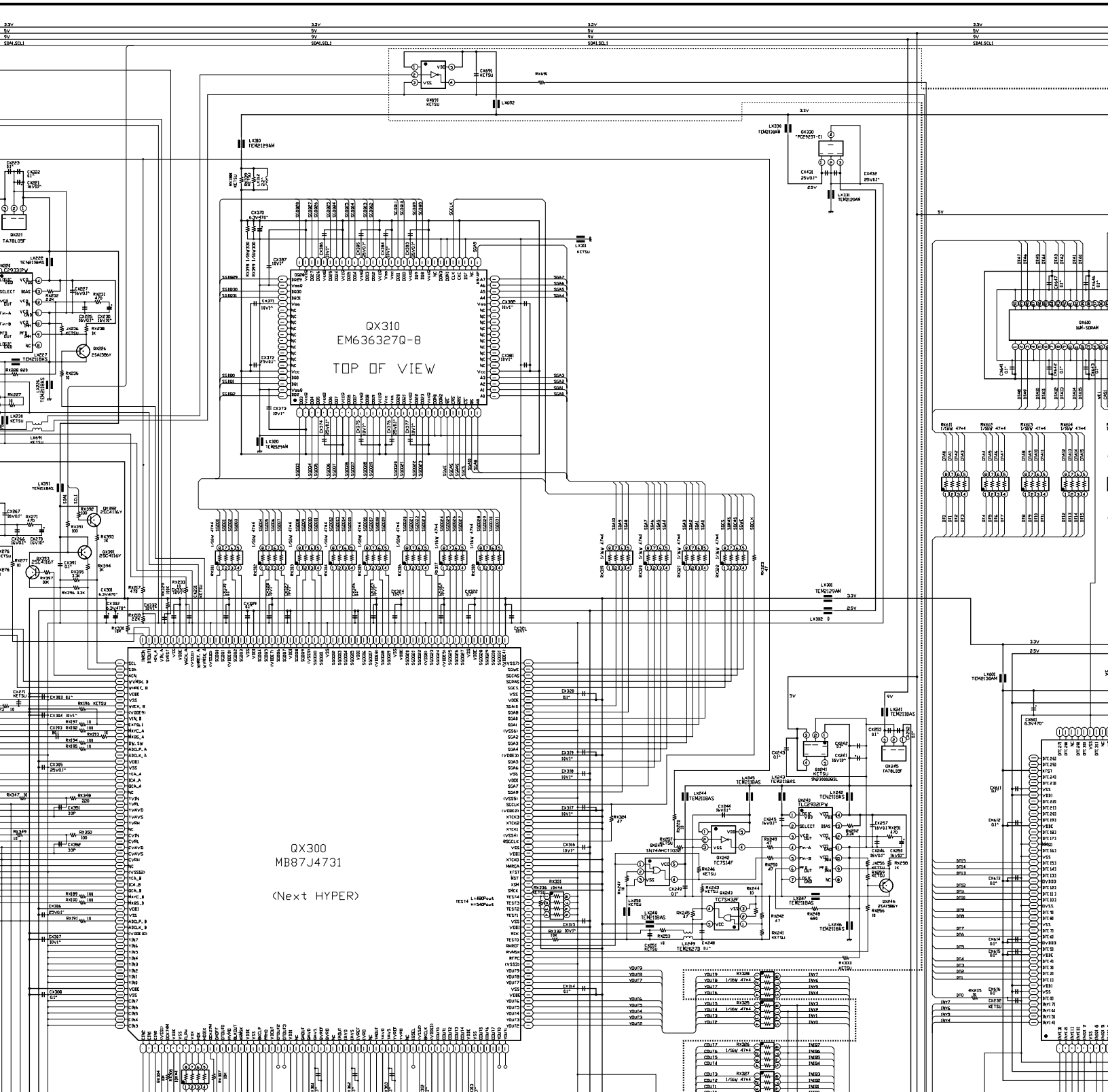
13
14
15
16
17
18
19
QX310
EM6363270-8
TOP OF VIEW
QX300
MB87J4731
(Next HYPER)

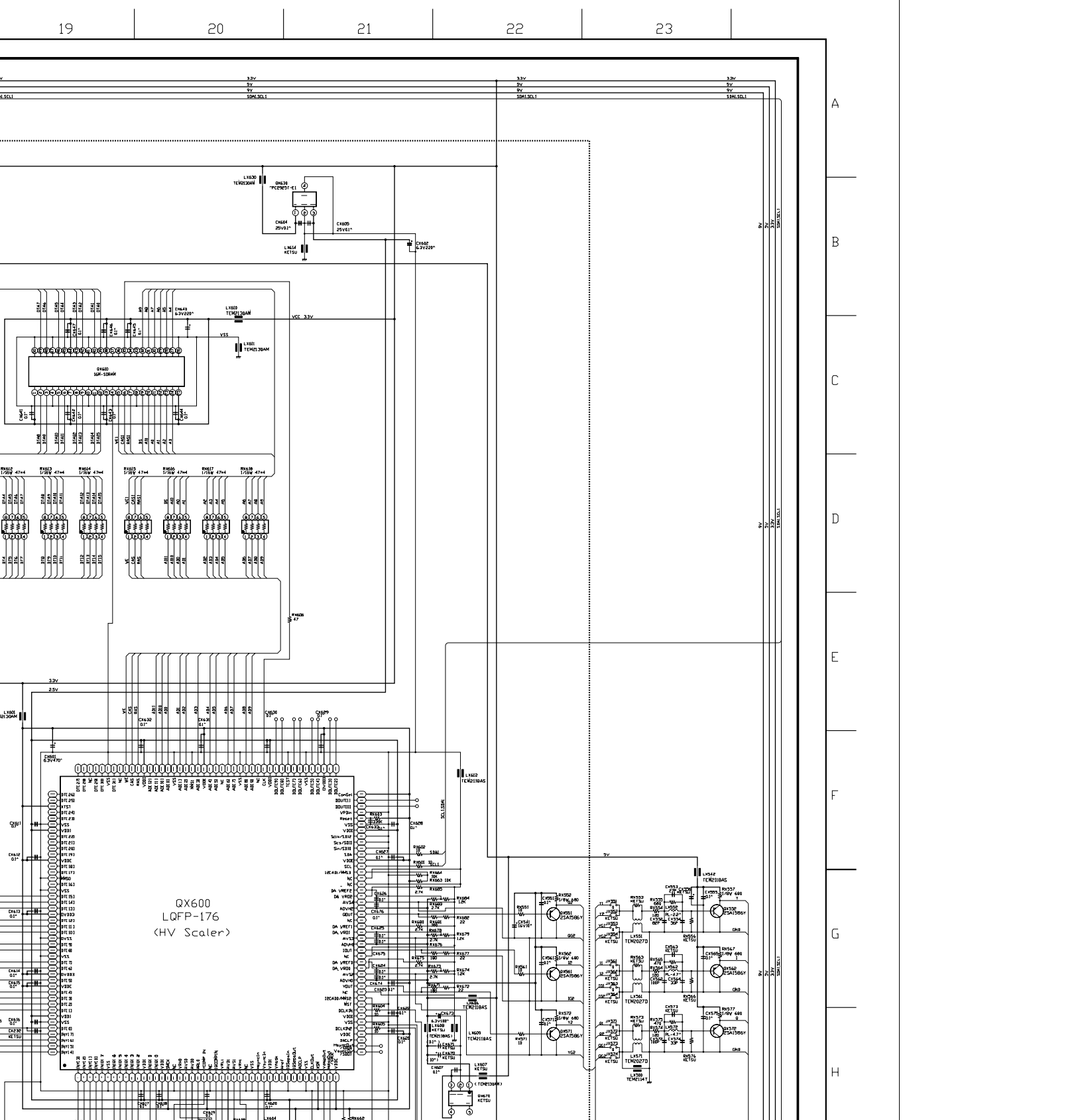
19
20
21
22
23
A
B
C
D
E
F
G
H
QX600
LQFP-176
(HV Scaler)
3.3V
5V
9V
SDA1.SCL1
VCC 3.3V
VSS

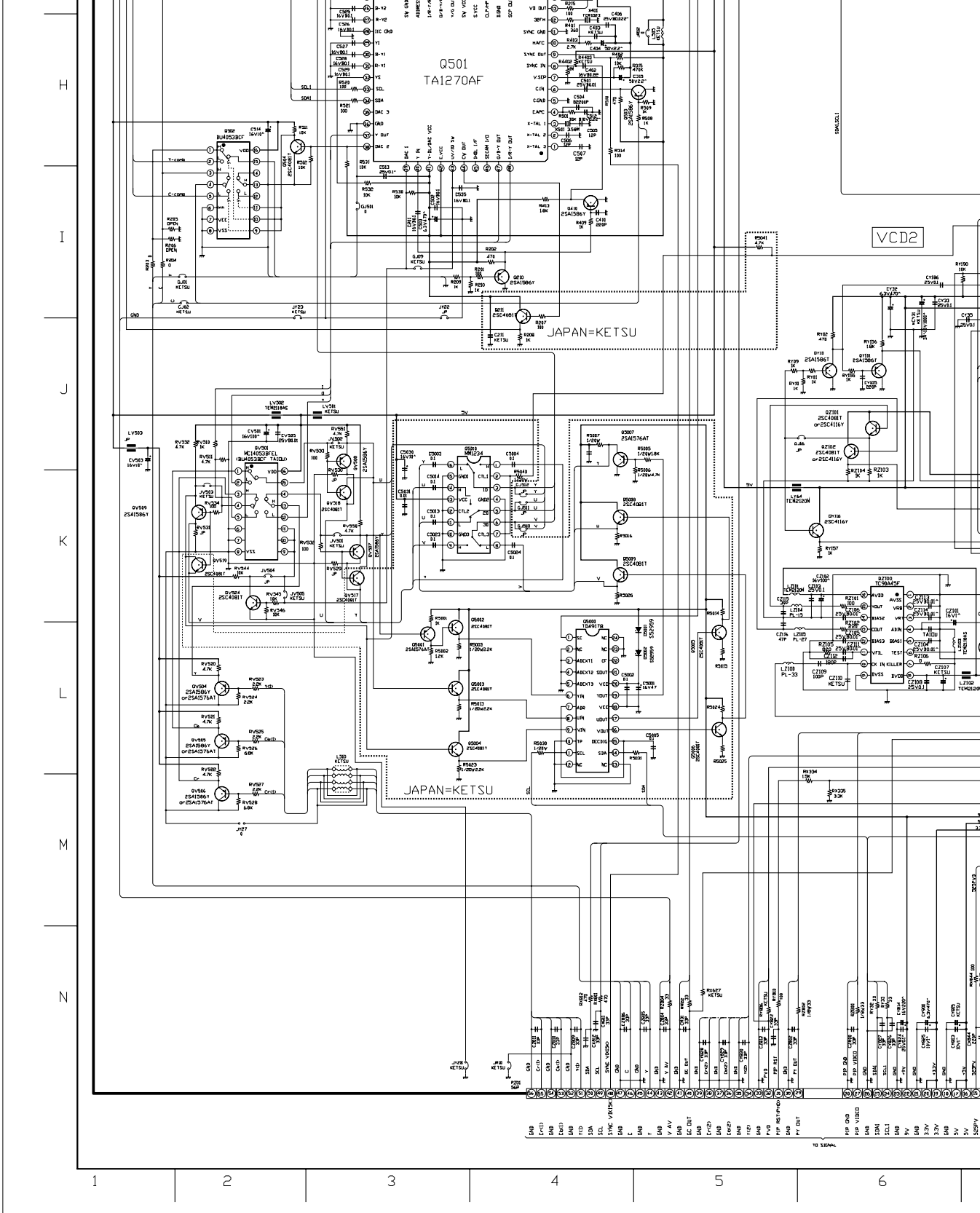
Q501
TA1270AF
VCD2
JAPAN=KETSU
JAPAN=KETSU
TO SIGNAL

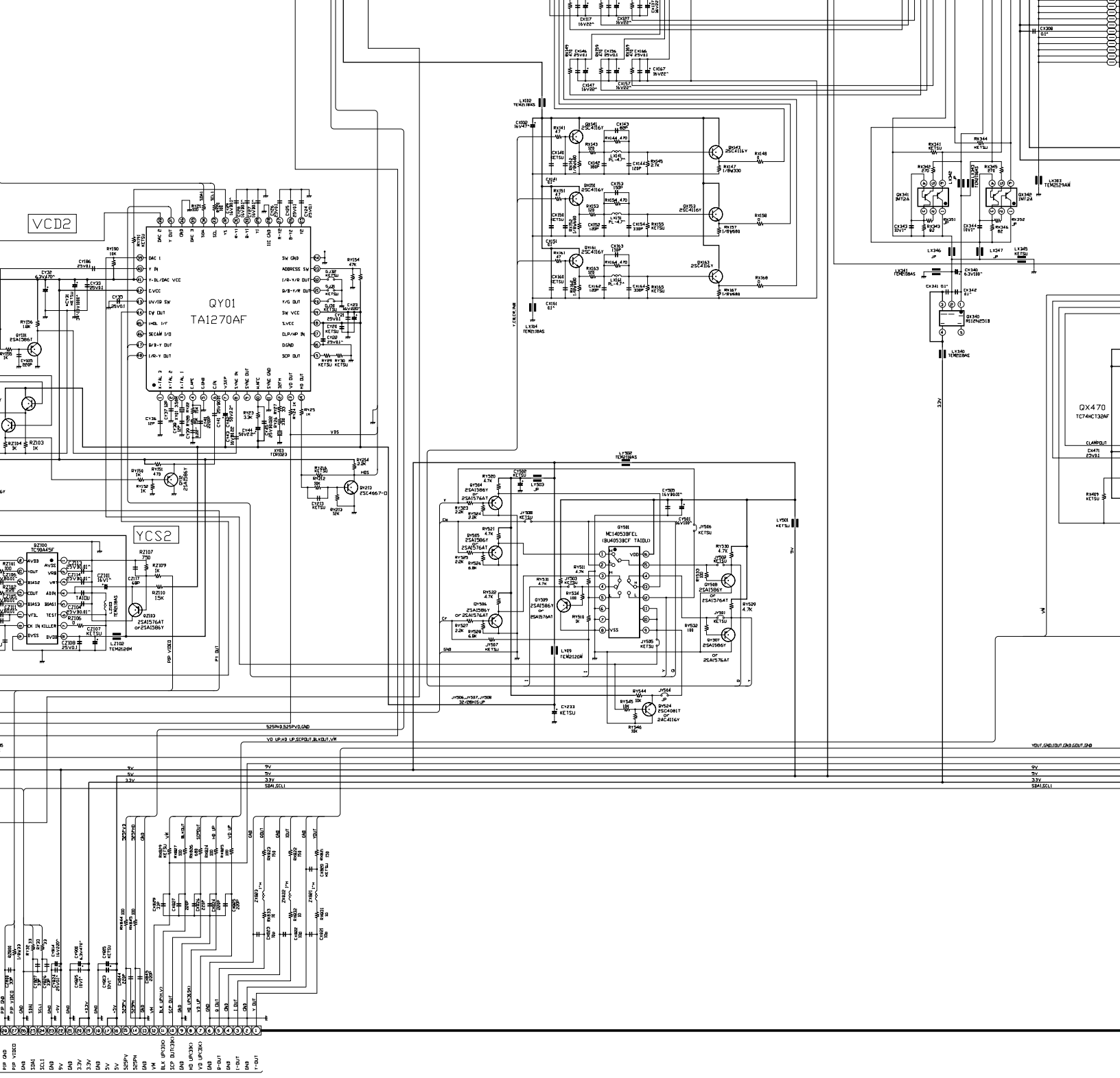
VCD2
QY01
TA1270AF
YCS2
QX470
TC74HC138AF
MC14053BFEL
(BU4053BCF TAIDU)
2SA1586Y
2SA1576AT
2SC4116Y
2SC4081T
2SC4617-D
M62429FP
M62362FP
M52762FP
M52744FP
M52343FP
M52341FP
M52340FP
M52320FP
M52315FP
M52310FP
M52305FP
M52302FP
M52301FP
M52300FP
M52295FP
M52290FP
M52285FP
M52280FP
M52275FP
M52270FP
M52265FP
M52260FP
M52255FP
M52250FP
M52245FP
M52240FP
M52235FP
M52230FP
M52225FP
M52220FP
M52215FP
M52210FP
M52205FP
M52200FP
M52195FP
M52190FP
M52185FP
M52180FP
M52175FP
M52170FP
M52165FP
M52160FP
M52155FP
M52150FP
M52145FP
M52140FP
M52135FP
M52130FP
M52125FP
M52120FP
M52115FP
M52110FP
M52105FP

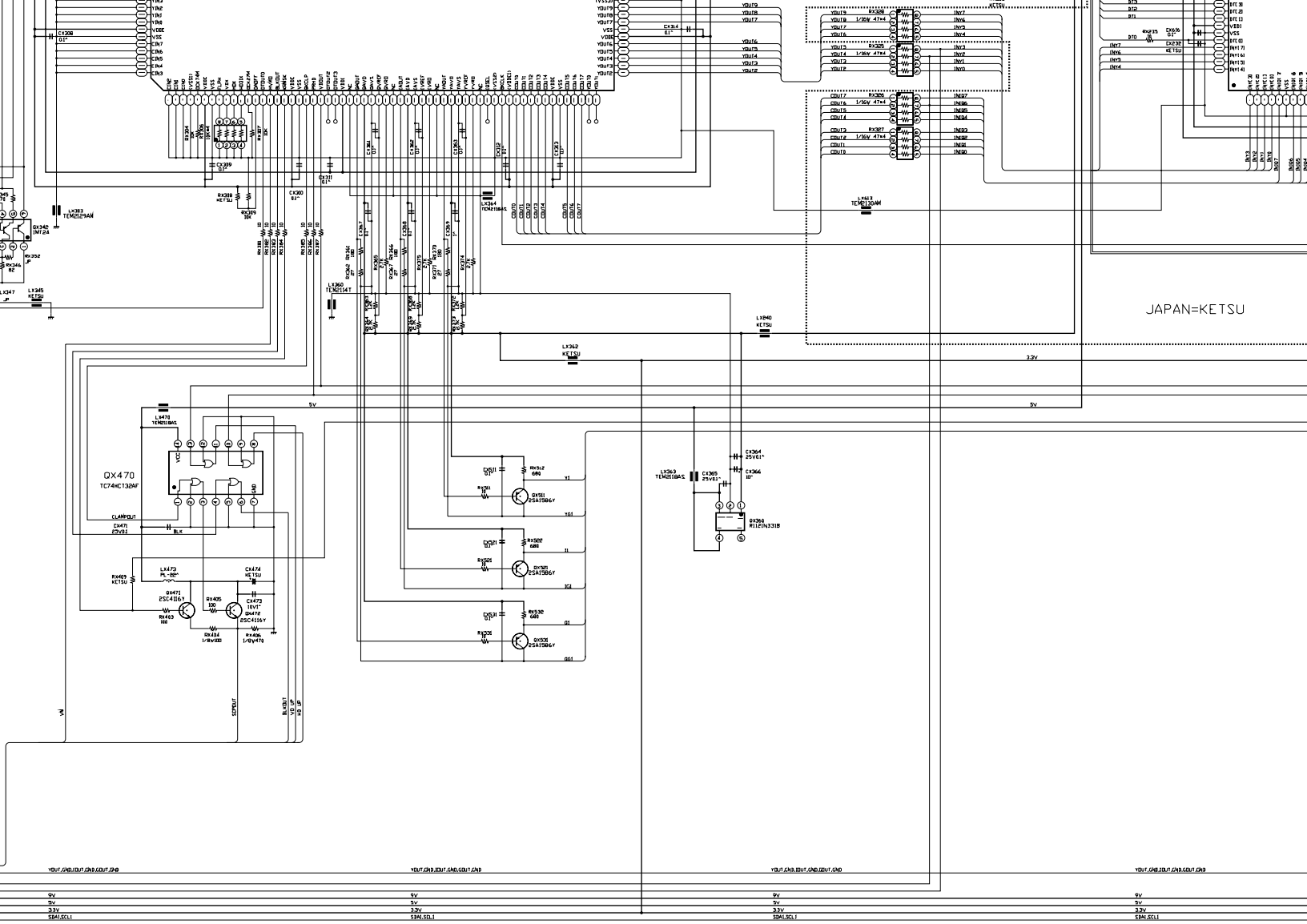

* KETSU

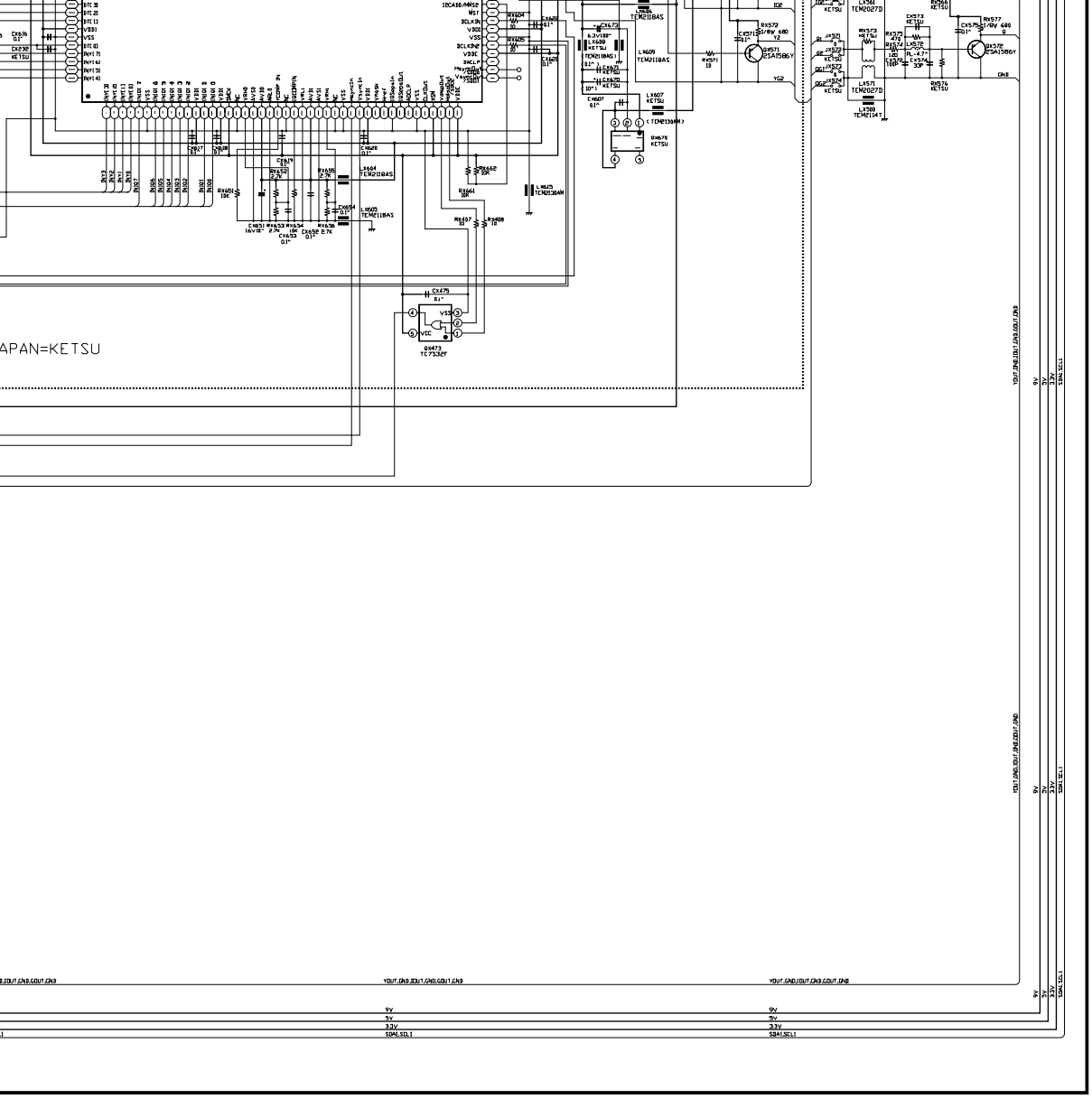

* KETSU means to open the circuit.

NEXT HYPER
(ADVANCED HYPER)
50H81

H
I
J
K
L
M
0

19 | 20 | 21 | 22 | 23